RFSoC UltraScale+ Evaluation Board

HW-Z1-ZCU111

DISCLAIMER:
XILINX IS DISCLOSING THIS USER GUIDE, MANUAL, RELEASE NOTE, SCHEMATIC, AND/OR SPECIFICATION (THE "DOCUMENTATION") TO YOU SOLELY FOR USE IN THE DEVELOPMENT OF DESIGNS TO OPERATE WITH XILINX HARDWARE DEVICES. YOU MAY NOT REPRODUCE, DISTRIBUTE, REPUBLISH, DOWNLOAD, DISPLAY, POST, OR TRANSMIT THE DOCUMENTATION IN ANY FORM OR BY ANY MEANS INCLUDING, BUT NOT LIMITED TO, ELECTRONIC, MECHANICAL, PHOTOCOPYING, RECORDING, OR OTHERWISE, WITHOUT THE PRIOR WRITTEN CONSENT OF XILINX. XILINX EXPRESSLY DISCLAIMS ANY LIABILITY ARISING OUT OF YOUR USE OF THE DOCUMENTATION. XILINX RESERVES THE RIGHT, AT ITS SOLE DISCRETION, TO CHANGE THE DOCUMENTATION WITHOUT NOTICE AT ANY TIME. XILINX ASSUMES NO OBLIGATION TO CORRECT ANY ERRORS CONTAINED IN THE DOCUMENTATION, OR TO ADVISE YOU OF ANY CORRECTIONS OR UPDATES. XILINX EXPRESSLY DISCLAIMS ANY LIABILITY IN CONNECTION WITH TECHNICAL SUPPORT OR ASSISTANCE THAT MAY BE PROVIDED TO YOU IN CONNECTION WITH THE DOCUMENTATION.

THE DOCUMENTATION IS DISCLOSED TO YOU "AS-IS" WITH NO WARRANTY OF ANY KIND. XILINX MAKES NO OTHER WARRANTIES, WHETHER EXPRESS, IMPLIED, OR STATUTORY, REGARDING THE DOCUMENTATION, INCLUDING ANY WARRANTIES OF MERCHANTABILITY, FITNESS FOR A PARTICULAR PURPOSE, OR NONINFRINGEMENT OF THIRD-PARTY RIGHTS. IN NO EVENT WILL XILINX BE LIABLE FOR ANY CONSEQUENTIAL, INDIRECT, EXEMPLARY, SPECIAL, OR INCIDENTAL DAMAGES, INCLUDING ANY LOSS OF DATA OR LOST PROFITS, ARISING FROM YOUR USE OF

THE XILINX HARDWARE, FPGA AND CPLD DEVICES REFERRED TO HEREIN ("PRODUCTS") ARE SUBJECT TO THE TERMS AND CONDITIONS OF THE XILINX LIMITED WARRANTY WHICH CAN BE VIEWED AT http://www.xilinx.com/warranty.htm. THIS LIMITED WARRANTY DOES NOT EXTEND TO ANY USE OF PRODUCTS IN AN APPLICATION OR ENVIRONMENT THAT IS NOT WITHIN THE SPECIFICATIONS STATED ON THE XILINX DATA SHEET.

ALL SPECIFICATIONS ARE SUBJECT TO CHANGE WITHOUT NOTICE.

PRODUCTS ARE NOT DESIGNED OR INTENDED TO BE FAIL-SAFE, OR FOR USE IN ANY APPLICATION REQUIRING FAIL-SAFE PERFORMANCE, SUCH AS LIFE-SUPPORT OR SAFETY DEVICES OR SYSTEMS, OR ANY OTHER APPLICATION THAT INVOKES THE POTENTIAL RISKS OF DEATH, PERSONAL INJURY OR PROPERTY OR ENVIRONMENTAL DAMAGE

("CRITICAL APPLICATIONS"). USE OF PRODUCTS IN CRITICAL APPLICATIONS IS AT THE SOLE RISK OF CUSTOMER, SUBJECT TO APPLICABLE LAWS AND REGULATIONS. ALL SPECIFICATIONS ARE SUBJECT TO CHANGE WITHOUT NOTICE.

XILINX
2100 Logic Drive
San Jose, CA 95124

PCB P/N : 1280976
ASSY P/N : 0432076
TEST P/N : TSS0192

Title: HW-Z1-ZCU111
001 Title Page

Ver 1.0

Size B | Date Modified: Tuesday, May 29, 2018 | Document Number: 0381811 | Rev 01

Engineer: BF

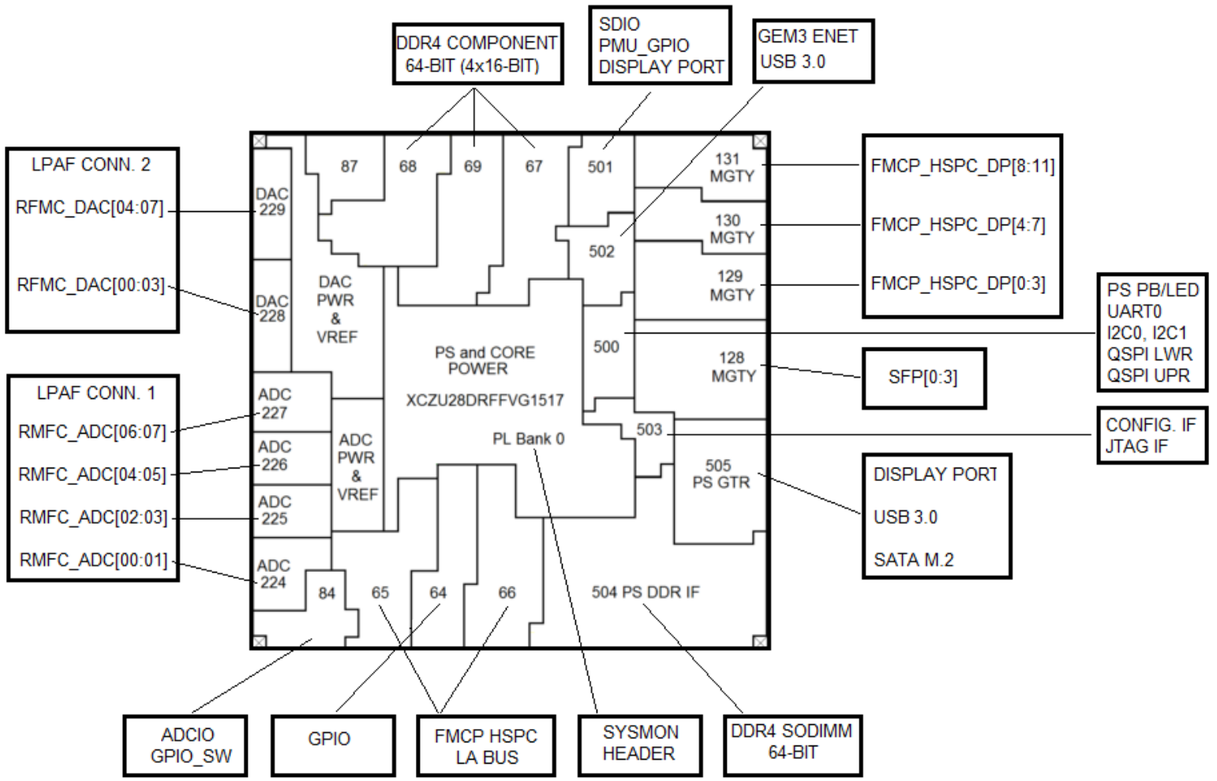

XILINX
2100 Logic Drive
San Jose, CA 95124

PCB P/N : 1280976
ASSY P/N : 0432076
TEST P/N : TSS0192

Title: HW-Z1-ZCU111
002 Block Diagram

Ver 1.0

Size	Date Modified:	Document Number:	Rev
B	Tuesday, May 29, 2018	0381811	01

Engineer: BF

POR_OVERRIDE select
Default: 2-3 GND

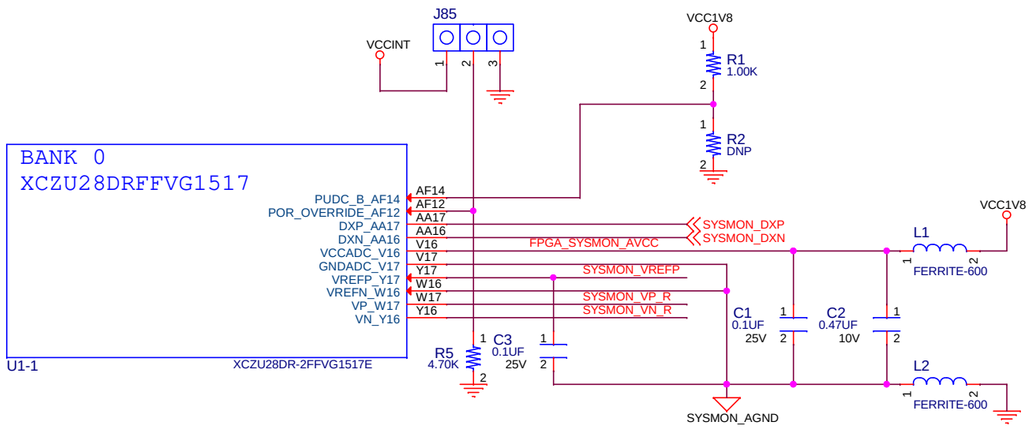

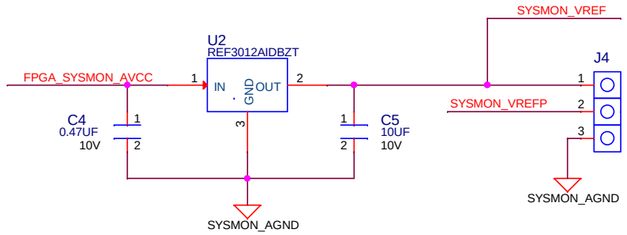

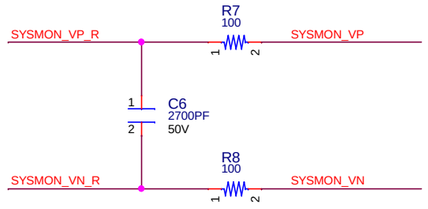

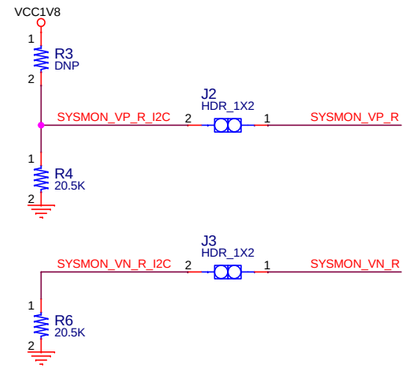

SYSMON I2C Address jumpers

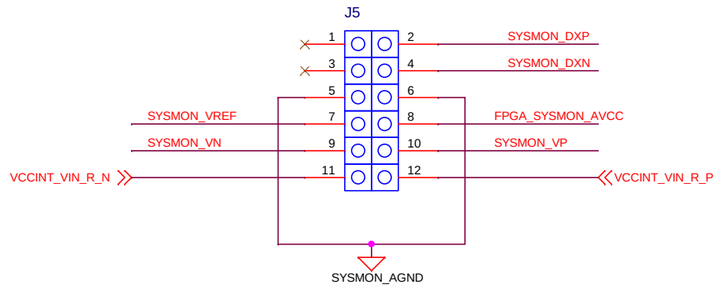

XILINX
2100 Logic Drive
San Jose, CA 95124

PCB P/N : 1280976
ASSY P/N : 0432076
TEST P/N : TSS0192

Title: HW-Z1-ZCU111
003 Zynq Bank 0

Ver 1.0

Size	Date Modified:	Document Number:	Rev
B	Tuesday, May 29, 2018	0381811	01

Engineer: BF

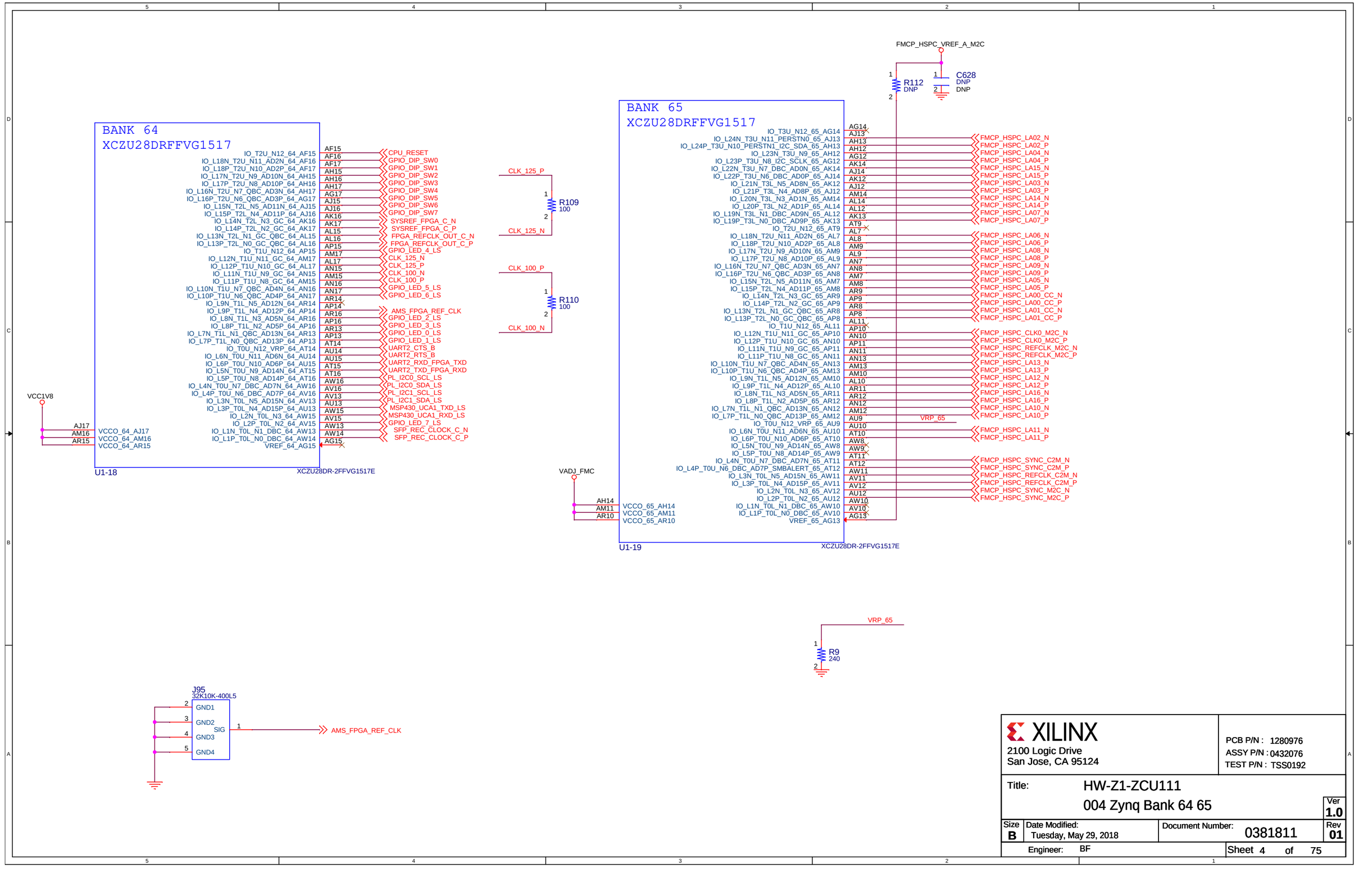
BANK 64
XCZU28DRFFVG1517
IO_T2U_N12_64_AF15
IO_L18N_T2U_N11_AD2N_64_AF16
IO_L18P_T2U_N10_AD2P_64_AF17
IO_L17N_T2U_N9_AD10N_64_AH15
IO_L17P_T2U_N8_AD10P_64_AH16
IO_L16N_T2U_N7_QBC_AD3N_64_AH17
IO_L16P_T2U_N6_QBC_AD3P_64_AG17
IO_L15N_T2L_N5_AD11N_64_AJ15
IO_L15P_T2L_N4_AD11P_64_AJ16
IO_L14N_T2L_N3_GC_64_AK16
IO_L14P_T2L_N2_GC_64_AK17
IO_L13N_T2L_N1_GC_QBC_64_AL15
IO_L13P_T2L_N0_GC_QBC_64_AL16
IO_T1U_N12_64_AP15
IO_L12N_T1U_N11_GC_64_AM17
IO_L12P_T1U_N10_GC_64_AL17
IO_L11N_T1U_N9_GC_64_AN15
IO_L11P_T1U_N8_GC_64_AM15
IO_L10N_T1U_N7_QBC_AD4N_64_AN16
IO_L10P_T1U_N6_QBC_AD4P_64_AN17
IO_L9N_T1L_N5_AD12N_64_AR14
IO_L9P_T1L_N4_AD12P_64_AP14
IO_L8N_T1L_N3_AD5N_64_AR16
IO_L8P_T1L_N2_AD5P_64_AP16
IO_L7N_T1L_N1_QBC_AD13N_64_AR13
IO_L7P_T1L_N0_QBC_AD13P_64_AP13
IO_T0U_N12_VRP_64_AT14
IO_L6N_T0U_N11_AD6N_64_AU14
IO_L6P_T0U_N10_AD6P_64_AU15
IO_L5N_T0U_N9_AD14N_64_AT15
IO_L5P_T0U_N8_AD14P_64_AT16
IO_L4N_T0U_N7_DBC_AD7N_64_AW16
IO_L4P_T0U_N6_DBC_AD7P_64_AV16
IO_L3N_T0L_N5_AD15N_64_AV13
IO_L3P_T0L_N4_AD15P_64_AU13
IO_L2N_T0L_N3_64_AW15
IO_L2P_T0L_N2_64_AV15
IO_L1N_T0L_N1_DBC_64_AW13
IO_L1P_T0L_N0_DBC_64_AW14
VREF_64_AG15
AF15
AF16
AF17
AH15
AH16
AH17
AG17
AJ15
AJ16
AK16
AK17
AL15
AL16
AP15
AM17
AL17
AN15
AM15
AN16
AN17
AR14
AP14
AR16
AP16
AR13
AP13
AT14
AU14
AU15
AT15
AT16
AW16
AV16
AV13
AU13
AW15
AV15
AW13
AW14
AG15
CPU_RESET
GPIO_DIP_SW0
GPIO_DIP_SW1
GPIO_DIP_SW2
GPIO_DIP_SW3
GPIO_DIP_SW4
GPIO_DIP_SW5
GPIO_DIP_SW6
GPIO_DIP_SW7
SYSREF_FPGA_C_N
SYSREF_FPGA_C_P
FPGA_REFCLK_OUT_C_N
FPGA_REFCLK_OUT_C_P
GPIO_LED_4_LS
CLK_125_N
CLK_125_P
CLK_100_N
CLK_100_P
GPIO_LED_5_LS
GPIO_LED_6_LS
AMS_FPGA_REF_CLK
GPIO_LED_2_LS
GPIO_LED_3_LS
GPIO_LED_0_LS
GPIO_LED_1_LS
UART2_CTS_B
UART2_RTS_B
UART2_RXD_FPGA_TXD
UART2_TXD_FPGA_RXD
PL_I2C0_SCL_LS
PL_I2C0_SDA_LS
PL_I2C1_SCL_LS
PL_I2C1_SDA_LS
MSP430_UCA1_TXD_LS
MSP430_UCA1_RXD_LS
GPIO_LED_7_LS
SFP_REC_CLOCK_C_N
SFP_REC_CLOCK_C_P
VCC1V8
AJ17
AM16
AR15
VCCO_64_AJ17
VCCO_64_AM16
VCCO_64_AR15
U1-18
XCZU28DR-2FFVG1517E
CLK_125_P
R109
100
CLK_125_N
CLK_100_P
R110
100
CLK_100_N
BANK 65
XCZU28DRFFVG1517
IO_T3U_N12_65_AG14
IO_L24N_T3U_N11_PERSTN0_65_AJ13
IO_L24P_T3U_N10_PERSTN1_I2C_SDA_65_AH13
IO_L23N_T3U_N9_65_AH12
IO_L23P_T3U_N8_I2C_SCLK_65_AG12
IO_L22N_T3U_N7_DBC_AD0N_65_AK14
IO_L22P_T3U_N6_DBC_AD0P_65_AJ14
IO_L21N_T3L_N5_AD8N_65_AK12
IO_L21P_T3L_N4_AD8P_65_AJ12
IO_L20N_T3L_N3_AD1N_65_AM14
IO_L20P_T3L_N2_AD1P_65_AL14
IO_L19N_T3L_N1_DBC_AD9N_65_AL12
IO_L19P_T3L_N0_DBC_AD9P_65_AK13
IO_T2U_N12_65_AT9
IO_L18N_T2U_N11_AD2N_65_AL7
IO_L18P_T2U_N10_AD2P_65_AL8
IO_L17N_T2U_N9_AD10N_65_AM9
IO_L17P_T2U_N8_AD10P_65_AL9
IO_L16N_T2U_N7_QBC_AD3N_65_AN7
IO_L16P_T2U_N6_QBC_AD3P_65_AN8
IO_L15N_T2L_N5_AD11N_65_AM7
IO_L15P_T2L_N4_AD11P_65_AM8
IO_L14N_T2L_N3_GC_65_AR9
IO_L14P_T2L_N2_GC_65_AP9
IO_L13N_T2L_N1_GC_QBC_65_AR8
IO_L13P_T2L_N0_GC_QBC_65_AP8
IO_T1U_N12_65_AL11
IO_L12N_T1U_N11_GC_65_AP10
IO_L12P_T1U_N10_GC_65_AN10
IO_L11N_T1U_N9_GC_65_AP11
IO_L11P_T1U_N8_GC_65_AN11
IO_L10N_T1U_N7_QBC_AD4N_65_AN13
IO_L10P_T1U_N6_QBC_AD4P_65_AM13
IO_L9N_T1L_N5_AD12N_65_AM10
IO_L9P_T1L_N4_AD12P_65_AL10
IO_L8N_T1L_N3_AD5N_65_AR11
IO_L8P_T1L_N2_AD5P_65_AR12
IO_L7N_T1L_N1_QBC_AD13N_65_AN12
IO_L7P_T1L_N0_QBC_AD13P_65_AM12
IO_T0U_N12_VRP_65_AU9
IO_L6N_T0U_N11_AD6N_65_AU10
IO_L6P_T0U_N10_AD6P_65_AT10
IO_L5N_T0U_N9_AD14N_65_AW8
IO_L5P_T0U_N8_AD14P_65_AW9
IO_L4N_T0U_N7_DBC_AD7N_65_AT11
IO_L4P_T0U_N6_DBC_AD7P_SMBALERT_65_AT12
IO_L3N_T0L_N5_AD15N_65_AW11
IO_L3P_T0L_N4_AD15P_65_AV11
IO_L2N_T0L_N3_65_AV12
IO_L2P_T0L_N2_65_AU12
IO_L1N_T0L_N1_DBC_65_AW10
IO_L1P_T0L_N0_DBC_65_AV10
VREF_65_AG13
AG14
AJ13
AH13
AH12
AG12
AK14
AJ14
AK12
AJ12
AM14
AL14
AL12
AK13
AT9
AL7
AL8
AM9
AL9
AN7
AN8
AM7
AM8
AR9
AP9
AR8
AP8
AL11
AP10
AN10
AP11
AN11
AN13
AM13
AM10
AL10
AR11
AR12
AN12
AM12
AU9
AU10
AT10
AW8
AW9
AT11
AT12
AW11
AV11
AV12
AU12
AW10
AV10
AG13
FMCP_HSPC_LA02_N
FMCP_HSPC_LA02_P
FMCP_HSPC_LA04_N
FMCP_HSPC_LA04_P
FMCP_HSPC_LA15_N
FMCP_HSPC_LA15_P
FMCP_HSPC_LA03_N
FMCP_HSPC_LA03_P
FMCP_HSPC_LA14_N
FMCP_HSPC_LA14_P
FMCP_HSPC_LA07_N
FMCP_HSPC_LA07_P
FMCP_HSPC_LA06_N
FMCP_HSPC_LA06_P
FMCP_HSPC_LA08_N
FMCP_HSPC_LA08_P
FMCP_HSPC_LA09_N
FMCP_HSPC_LA09_P
FMCP_HSPC_LA05_N
FMCP_HSPC_LA05_P
FMCP_HSPC_LA00_CC_N
FMCP_HSPC_LA00_CC_P
FMCP_HSPC_LA01_CC_N
FMCP_HSPC_LA01_CC_P
FMCP_HSPC_CLK0_M2C_N
FMCP_HSPC_CLK0_M2C_P
FMCP_HSPC_REFCLK_M2C_N
FMCP_HSPC_REFCLK_M2C_P
FMCP_HSPC_LA13_N
FMCP_HSPC_LA13_P
FMCP_HSPC_LA12_N
FMCP_HSPC_LA12_P
FMCP_HSPC_LA16_N
FMCP_HSPC_LA16_P
FMCP_HSPC_LA10_N
FMCP_HSPC_LA10_P
VRP_65
FMCP_HSPC_LA11_N
FMCP_HSPC_LA11_P
FMCP_HSPC_SYNC_C2M_N
FMCP_HSPC_SYNC_C2M_P
FMCP_HSPC_REFCLK_C2M_N
FMCP_HSPC_REFCLK_C2M_P
FMCP_HSPC_SYNC_M2C_N
FMCP_HSPC_SYNC_M2C_P
VADJ_FMC
AH14
AM11
AR10
VCCO_65_AH14
VCCO_65_AM11
VCCO_65_AR10
U1-19
XCZU28DR-2FFVG1517E
FMCP_HSPC_VREF_A_M2C
R112
DNP
C628
DNP
DNP
VRP_65
R9
240
J95
32K10K-400L5
GND1
GND2
SIG
GND3
GND4
AMS_FPGA_REF_CLK
XILINX
2100 Logic Drive
San Jose, CA 95124
PCB P/N : 1280976
ASSY P/N : 0432076
TEST P/N : TSS0192
Title: HW-Z1-ZCU111
004 Zynq Bank 64 65
Ver 1.0
Size B
Date Modified: Tuesday, May 29, 2018
Document Number: 0381811
Rev 01
Engineer: BF
Sheet 4 of 75

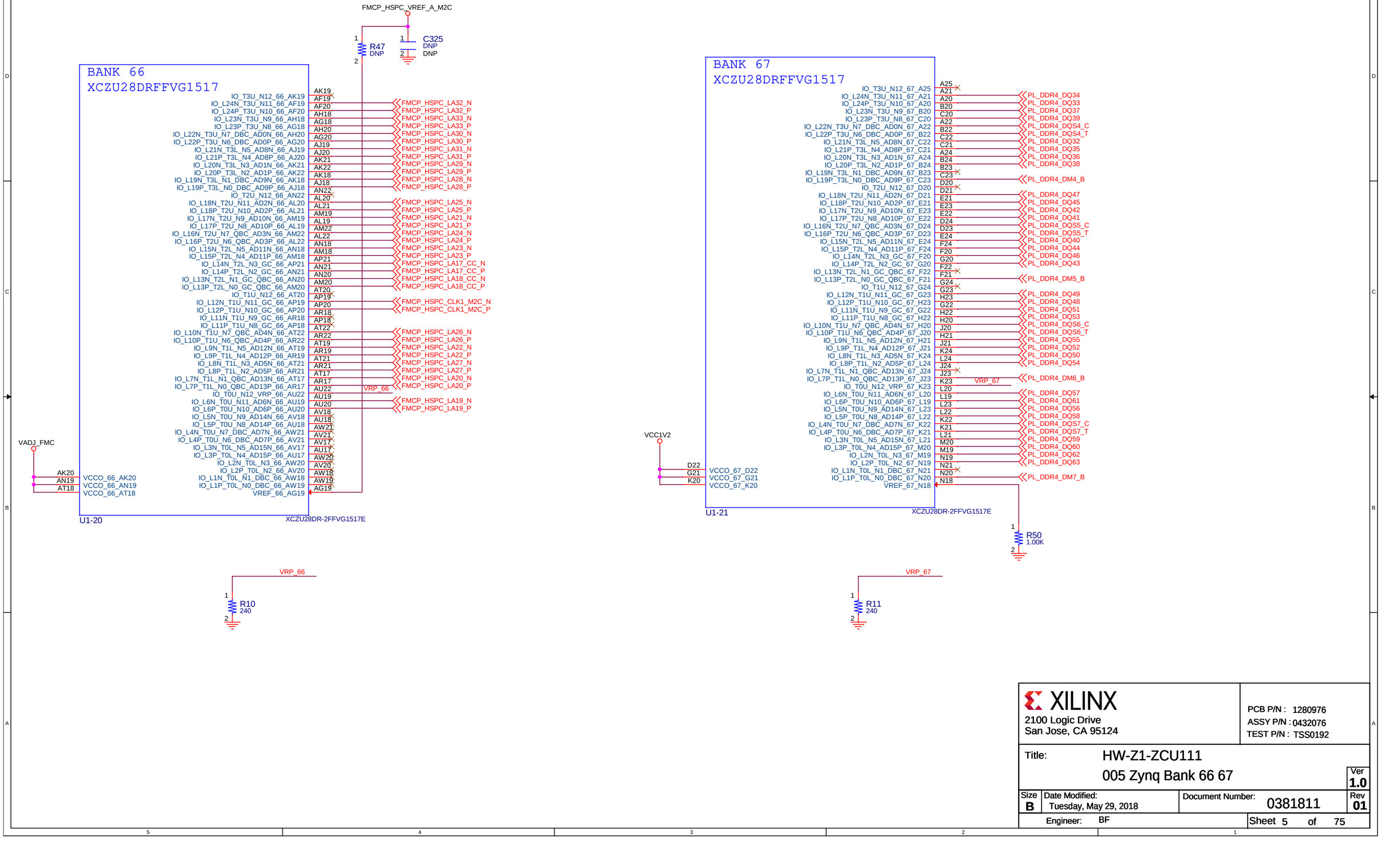
FMCP_HSPC_VREF_A_M2C
R47
DNP
C325
DNP
DNP
BANK 66
XCZU28DRFFVG1517
IO_T3U_N12_66_AK19
IO_L24N_T3U_N11_66_AF19
IO_L24P_T3U_N10_66_AF20
IO_L23N_T3U_N9_66_AH18
IO_L23P_T3U_N8_66_AG18
IO_L22N_T3U_N7_DBC_AD0N_66_AH20
IO_L22P_T3U_N6_DBC_AD0P_66_AG20
IO_L21N_T3L_N5_AD8N_66_AJ19
IO_L21P_T3L_N4_AD8P_66_AJ20
IO_L20N_T3L_N3_AD1N_66_AK21
IO_L20P_T3L_N2_AD1P_66_AK22
IO_L19N_T3L_N1_DBC_AD9N_66_AK18
IO_L19P_T3L_N0_DBC_AD9P_66_AJ18
IO_T2U_N12_66_AN22
IO_L18N_T2U_N11_AD2N_66_AL20
IO_L18P_T2U_N10_AD2P_66_AL21
IO_L17N_T2U_N9_AD10N_66_AM19
IO_L17P_T2U_N8_AD10P_66_AL19
IO_L16N_T2U_N7_QBC_AD3N_66_AM22
IO_L16P_T2U_N6_QBC_AD3P_66_AL22
IO_L15N_T2L_N5_AD11N_66_AN18
IO_L15P_T2L_N4_AD11P_66_AM18
IO_L14N_T2L_N3_GC_66_AP21
IO_L14P_T2L_N2_GC_66_AN21
IO_L13N_T2L_N1_GC_QBC_66_AN20
IO_L13P_T2L_N0_GC_QBC_66_AM20
IO_T1U_N12_66_AT20
IO_L12N_T1U_N11_GC_66_AP19
IO_L12P_T1U_N10_GC_66_AP20
IO_L11N_T1U_N9_GC_66_AR18
IO_L11P_T1U_N8_GC_66_AP18
IO_L10N_T1U_N7_QBC_AD4N_66_AT22
IO_L10P_T1U_N6_QBC_AD4P_66_AR22
IO_L9N_T1L_N5_AD12N_66_AT19
IO_L9P_T1L_N4_AD12P_66_AR19
IO_L8N_T1L_N3_AD5N_66_AT21
IO_L8P_T1L_N2_AD5P_66_AR21
IO_L7N_T1L_N1_QBC_AD13N_66_AT17
IO_L7P_T1L_N0_QBC_AD13P_66_AR17
IO_T0U_N12_VRP_66_AU22
IO_L6N_T0U_N11_AD6N_66_AU19
IO_L6P_T0U_N10_AD6P_66_AU20
IO_L5N_T0U_N9_AD14N_66_AV18
IO_L5P_T0U_N8_AD14P_66_AU18
IO_L4N_T0U_N7_DBC_AD7N_66_AW21
IO_L4P_T0U_N6_DBC_AD7P_66_AV21
IO_L3N_T0L_N5_AD15N_66_AV17
IO_L3P_T0L_N4_AD15P_66_AU17
IO_L2N_T0L_N3_66_AW20
IO_L2P_T0L_N2_66_AV20
IO_L1N_T0L_N1_DBC_66_AW18
IO_L1P_T0L_N0_DBC_66_AW19
VREF_66_AG19
AK19
AF19
AF20
AH18
AG18
AH20
AG20
AJ19
AJ20
AK21
AK22
AK18
AJ18
AN22
AL20
AL21
AM19
AL19
AM22
AL22
AN18
AM18
AP21
AN21
AN20
AM20
AT20
AP19
AP20
AR18
AP18
AT22
AR22
AT19
AR19
AT21
AR21
AT17
AR17
AU22
AU19
AU20
AV18
AU18
AW21
AV21
AV17
AU17
AW20
AV20
AW18
AW19
AG19
FMCP_HSPC_LA32_N
FMCP_HSPC_LA32_P
FMCP_HSPC_LA33_N
FMCP_HSPC_LA33_P
FMCP_HSPC_LA30_N
FMCP_HSPC_LA30_P
FMCP_HSPC_LA31_N
FMCP_HSPC_LA31_P
FMCP_HSPC_LA29_N
FMCP_HSPC_LA29_P
FMCP_HSPC_LA28_N
FMCP_HSPC_LA28_P
FMCP_HSPC_LA25_N
FMCP_HSPC_LA25_P
FMCP_HSPC_LA21_N
FMCP_HSPC_LA21_P
FMCP_HSPC_LA24_N
FMCP_HSPC_LA24_P
FMCP_HSPC_LA23_N
FMCP_HSPC_LA23_P
FMCP_HSPC_LA17_CC_N
FMCP_HSPC_LA17_CC_P
FMCP_HSPC_LA18_CC_N
FMCP_HSPC_LA18_CC_P
FMCP_HSPC_CLK1_M2C_N
FMCP_HSPC_CLK1_M2C_P
FMCP_HSPC_LA26_N
FMCP_HSPC_LA26_P
FMCP_HSPC_LA22_N
FMCP_HSPC_LA22_P
FMCP_HSPC_LA27_N
FMCP_HSPC_LA27_P
FMCP_HSPC_LA20_N
FMCP_HSPC_LA20_P
VRP_66
FMCP_HSPC_LA19_N
FMCP_HSPC_LA19_P
VADJ_FMC
AK20
AN19
AT18
VCCO_66_AK20
VCCO_66_AN19
VCCO_66_AT18
U1-20
XCZU28DR-2FFVG1517E
VRP_66
R10
240
BANK 67
XCZU28DRFFVG1517
IO_T3U_N12_67_A25
IO_L24N_T3U_N11_67_A21
IO_L24P_T3U_N10_67_A20
IO_L23N_T3U_N9_67_B20
IO_L23P_T3U_N8_67_C20
IO_L22N_T3U_N7_DBC_AD0N_67_A22
IO_L22P_T3U_N6_DBC_AD0P_67_B22
IO_L21N_T3L_N5_AD8N_67_C22
IO_L21P_T3L_N4_AD8P_67_C21
IO_L20N_T3L_N3_AD1N_67_A24
IO_L20P_T3L_N2_AD1P_67_B24
IO_L19N_T3L_N1_DBC_AD9N_67_B23
IO_L19P_T3L_N0_DBC_AD9P_67_C23
IO_T2U_N12_67_D20
IO_L18N_T2U_N11_AD2N_67_D21
IO_L18P_T2U_N10_AD2P_67_E21
IO_L17N_T2U_N9_AD10N_67_E23
IO_L17P_T2U_N8_AD10P_67_E22
IO_L16N_T2U_N7_QBC_AD3N_67_D24
IO_L16P_T2U_N6_QBC_AD3P_67_D23
IO_L15N_T2L_N5_AD11N_67_E24
IO_L15P_T2L_N4_AD11P_67_F24
IO_L14N_T2L_N3_GC_67_F20
IO_L14P_T2L_N2_GC_67_G20
IO_L13N_T2L_N1_GC_QBC_67_F22
IO_L13P_T2L_N0_GC_QBC_67_F21
IO_T1U_N12_67_G24
IO_L12N_T1U_N11_GC_67_G23
IO_L12P_T1U_N10_GC_67_H23
IO_L11N_T1U_N9_GC_67_G22
IO_L11P_T1U_N8_GC_67_H22
IO_L10N_T1U_N7_QBC_AD4N_67_H20
IO_L10P_T1U_N6_QBC_AD4P_67_J20
IO_L9N_T1L_N5_AD12N_67_H21
IO_L9P_T1L_N4_AD12P_67_J21
IO_L8N_T1L_N3_AD5N_67_K24
IO_L8P_T1L_N2_AD5P_67_L24
IO_L7N_T1L_N1_QBC_AD13N_67_J24
IO_L7P_T1L_N0_QBC_AD13P_67_J23
IO_T0U_N12_VRP_67_K23
IO_L6N_T0U_N11_AD6N_67_L20
IO_L6P_T0U_N10_AD6P_67_L19
IO_L5N_T0U_N9_AD14N_67_L23
IO_L5P_T0U_N8_AD14P_67_L22
IO_L4N_T0U_N7_DBC_AD7N_67_K22
IO_L4P_T0U_N6_DBC_AD7P_67_K21
IO_L3N_T0L_N5_AD15N_67_L21
IO_L3P_T0L_N4_AD15P_67_M20
IO_L2N_T0L_N3_67_M19
IO_L2P_T0L_N2_67_N19
IO_L1N_T0L_N1_DBC_67_N21
IO_L1P_T0L_N0_DBC_67_N20
VREF_67_N18
A25
A21
A20
B20
C20
A22
B22
C22
C21
A24
B24
B23
C23
D20
D21
E21
E23
E22
D24
D23
E24
F24
F20
G20
F22
F21
G24
G23
H23
G22
H22
H20
J20
H21
J21
K24
L24
J24
J23
K23
L20
L19
L23
L22
K22
K21
L21
M20
M19
N19
N21
N20
N18
PL_DDR4_DQ34
PL_DDR4_DQ33
PL_DDR4_DQ37
PL_DDR4_DQ39
PL_DDR4_DQS4_C
PL_DDR4_DQS4_T
PL_DDR4_DQ32
PL_DDR4_DQ35
PL_DDR4_DQ36
PL_DDR4_DQ38
PL_DDR4_DM4_B
PL_DDR4_DQ47
PL_DDR4_DQ45
PL_DDR4_DQ42
PL_DDR4_DQ41
PL_DDR4_DQS5_C
PL_DDR4_DQS5_T
PL_DDR4_DQ40
PL_DDR4_DQ44
PL_DDR4_DQ46
PL_DDR4_DQ43
PL_DDR4_DM5_B
PL_DDR4_DQ49
PL_DDR4_DQ48
PL_DDR4_DQ51
PL_DDR4_DQ53
PL_DDR4_DQS6_C
PL_DDR4_DQS6_T
PL_DDR4_DQ55
PL_DDR4_DQ52
PL_DDR4_DQ50
PL_DDR4_DQ54
PL_DDR4_DM6_B
VRP_67
PL_DDR4_DQ57
PL_DDR4_DQ61
PL_DDR4_DQ56
PL_DDR4_DQ58
PL_DDR4_DQS7_C
PL_DDR4_DQS7_T
PL_DDR4_DQ59
PL_DDR4_DQ60
PL_DDR4_DQ62
PL_DDR4_DQ63
PL_DDR4_DM7_B
VCC1V2
D22
G21
K20
VCCO_67_D22
VCCO_67_G21
VCCO_67_K20
U1-21
XCZU28DR-2FFVG1517E
R50
1.00K
VRP_67
R11
240
XILINX
2100 Logic Drive
San Jose, CA 95124
PCB P/N : 1280976
ASSY P/N : 0432076
TEST P/N : TSS0192
Title: HW-Z1-ZCU111
005 Zynq Bank 66 67
Ver 1.0
Size B
Date Modified: Tuesday, May 29, 2018
Document Number: 0381811
Rev 01
Engineer: BF
Sheet 5 of 75

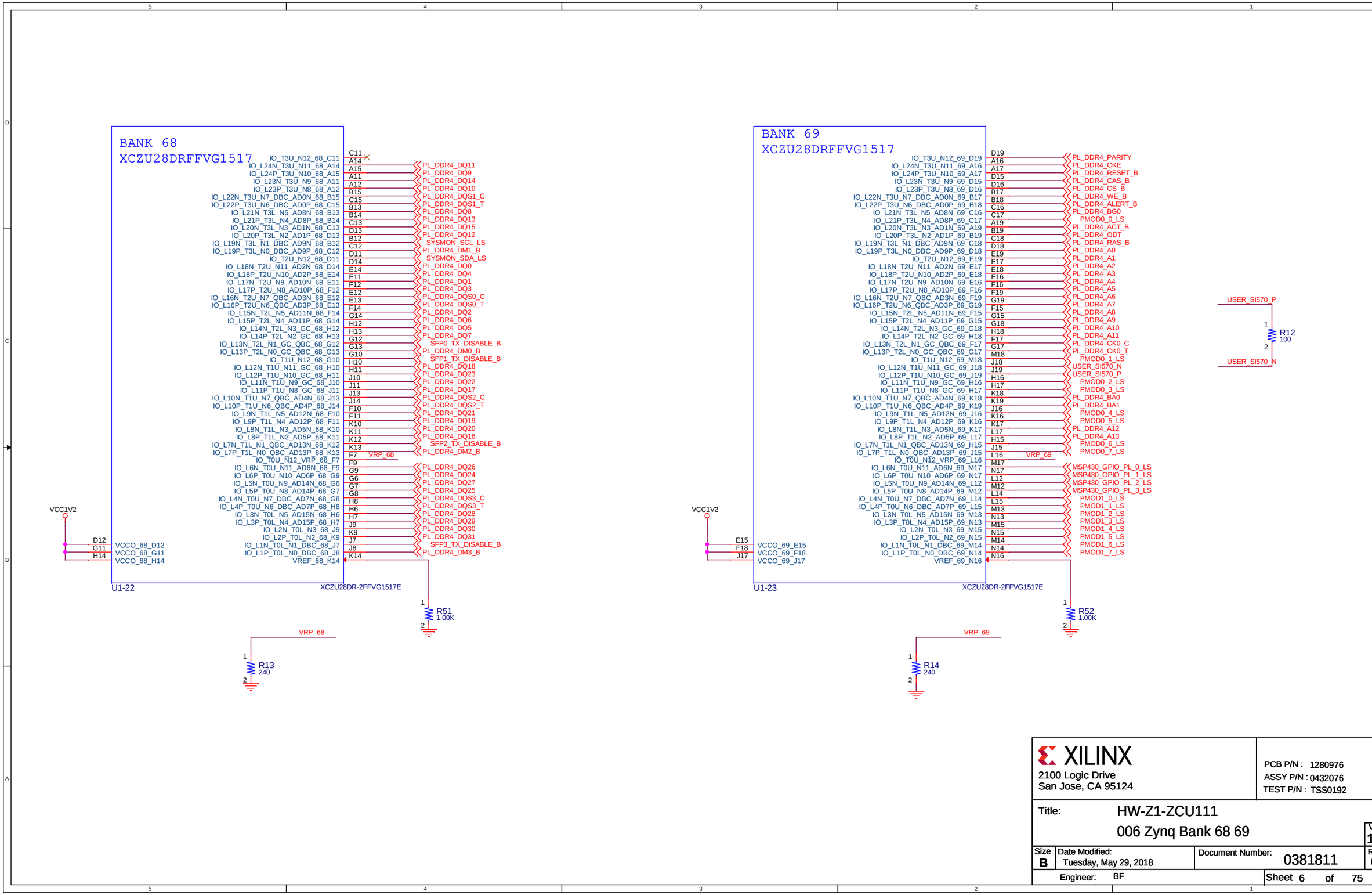
BANK 68
XCZU28DRFFVG1517
IO_T3U_N12_68_C11
IO_L24N_T3U_N11_68_A14
IO_L24P_T3U_N10_68_A15
IO_L23N_T3U_N9_68_A11
IO_L23P_T3U_N8_68_A12
IO_L22N_T3U_N7_DBC_AD0N_68_B15
IO_L22P_T3U_N6_DBC_AD0P_68_C15
IO_L21N_T3L_N5_AD8N_68_B13
IO_L21P_T3L_N4_AD8P_68_B14
IO_L20N_T3L_N3_AD1N_68_C13
IO_L20P_T3L_N2_AD1P_68_D13
IO_L19N_T3L_N1_DBC_AD9N_68_B12
IO_L19P_T3L_N0_DBC_AD9P_68_C12
IO_T2U_N12_68_D11
IO_L18N_T2U_N11_AD2N_68_D14
IO_L18P_T2U_N10_AD2P_68_E14
IO_L17N_T2U_N9_AD10N_68_E11
IO_L17P_T2U_N8_AD10P_68_F12
IO_L16N_T2U_N7_QBC_AD3N_68_E12
IO_L16P_T2U_N6_QBC_AD3P_68_E13
IO_L15N_T2L_N5_AD11N_68_F14
IO_L15P_T2L_N4_AD11P_68_G14
IO_L14N_T2L_N3_GC_68_H12
IO_L14P_T2L_N2_GC_68_H13
IO_L13N_T2L_N1_GC_QBC_68_G12
IO_L13P_T2L_N0_GC_QBC_68_G13
IO_T1U_N12_68_G10
IO_L12N_T1U_N11_GC_68_H10
IO_L12P_T1U_N10_GC_68_H11
IO_L11N_T1U_N9_GC_68_J10
IO_L11P_T1U_N8_GC_68_J11
IO_L10N_T1U_N7_QBC_AD4N_68_J13
IO_L10P_T1U_N6_QBC_AD4P_68_J14
IO_L9N_T1L_N5_AD12N_68_F10
IO_L9P_T1L_N4_AD12P_68_F11
IO_L8N_T1L_N3_AD5N_68_K10
IO_L8P_T1L_N2_AD5P_68_K11
IO_L7N_T1L_N1_QBC_AD13N_68_K12
IO_L7P_T1L_N0_QBC_AD13P_68_K13
IO_T0U_N12_VRP_68_F7
IO_L6N_T0U_N11_AD6N_68_F9
IO_L6P_T0U_N10_AD6P_68_G9
IO_L5N_T0U_N9_AD14N_68_G6
IO_L5P_T0U_N8_AD14P_68_G7
IO_L4N_T0U_N7_DBC_AD7N_68_G8
IO_L4P_T0U_N6_DBC_AD7P_68_H8
IO_L3N_T0L_N5_AD15N_68_H6
IO_L3P_T0L_N4_AD15P_68_H7
IO_L2N_T0L_N3_68_J9
IO_L2P_T0L_N2_68_K9
IO_L1N_T0L_N1_DBC_68_J7
IO_L1P_T0L_N0_DBC_68_J8
VREF_68_K14
C11
A14
A15
A11
A12
B15
C15
B13
B14
C13
D13
B12
C12
D11
D14
E14
E11
F12
E12
E13
F14
G14
H12
H13
G12
G13
G10
H10
H11
J10
J11
J13
J14
F10
F11
K10
K11
K12
K13
F7
F9
G9
G6
G7
G8
H8
H6
H7
J9
K9
J7
J8
K14
VRP_68
PL_DDR4_DQ11
PL_DDR4_DQ9
PL_DDR4_DQ14
PL_DDR4_DQ10
PL_DDR4_DQS1_C
PL_DDR4_DQS1_T
PL_DDR4_DQ8
PL_DDR4_DQ13
PL_DDR4_DQ15
PL_DDR4_DQ12
SYSMON_SCL_LS
PL_DDR4_DM1_B
SYSMON_SDA_LS
PL_DDR4_DQ0
PL_DDR4_DQ4
PL_DDR4_DQ1
PL_DDR4_DQ3
PL_DDR4_DQS0_C
PL_DDR4_DQS0_T
PL_DDR4_DQ2
PL_DDR4_DQ6
PL_DDR4_DQ5
PL_DDR4_DQ7
SFP0_TX_DISABLE_B
PL_DDR4_DM0_B
SFP1_TX_DISABLE_B
PL_DDR4_DQ18
PL_DDR4_DQ23
PL_DDR4_DQ22
PL_DDR4_DQ17
PL_DDR4_DQS2_C
PL_DDR4_DQS2_T
PL_DDR4_DQ21
PL_DDR4_DQ19
PL_DDR4_DQ20
PL_DDR4_DQ16
SFP2_TX_DISABLE_B
PL_DDR4_DM2_B
PL_DDR4_DQ26
PL_DDR4_DQ24
PL_DDR4_DQ27
PL_DDR4_DQ25
PL_DDR4_DQS3_C
PL_DDR4_DQS3_T
PL_DDR4_DQ28
PL_DDR4_DQ29
PL_DDR4_DQ30
PL_DDR4_DQ31
SFP3_TX_DISABLE_B
PL_DDR4_DM3_B
VCC1V2
D12
G11
H14
VCCO_68_D12
VCCO_68_G11
VCCO_68_H14
U1-22
XCZU28DR-2FFVG1517E
R51
1.00K
R13
240
VRP_68
BANK 69
XCZU28DRFFVG1517
IO_T3U_N12_69_D19
IO_L24N_T3U_N11_69_A16
IO_L24P_T3U_N10_69_A17
IO_L23N_T3U_N9_69_D15
IO_L23P_T3U_N8_69_D16
IO_L22N_T3U_N7_DBC_AD0N_69_B17
IO_L22P_T3U_N6_DBC_AD0P_69_B18
IO_L21N_T3L_N5_AD8N_69_C16
IO_L21P_T3L_N4_AD8P_69_C17
IO_L20N_T3L_N3_AD1N_69_A19
IO_L20P_T3L_N2_AD1P_69_B19
IO_L19N_T3L_N1_DBC_AD9N_69_C18
IO_L19P_T3L_N0_DBC_AD9P_69_D18
IO_T2U_N12_69_E19
IO_L18N_T2U_N11_AD2N_69_E17
IO_L18P_T2U_N10_AD2P_69_E18
IO_L17N_T2U_N9_AD10N_69_E16
IO_L17P_T2U_N8_AD10P_69_F16
IO_L16N_T2U_N7_QBC_AD3N_69_F19
IO_L16P_T2U_N6_QBC_AD3P_69_G19
IO_L15N_T2L_N5_AD11N_69_F15
IO_L15P_T2L_N4_AD11P_69_G15
IO_L14N_T2L_N3_GC_69_G18
IO_L14P_T2L_N2_GC_69_H18
IO_L13N_T2L_N1_GC_QBC_69_F17
IO_L13P_T2L_N0_GC_QBC_69_G17
IO_T1U_N12_69_M18
IO_L12N_T1U_N11_GC_69_J18
IO_L12P_T1U_N10_GC_69_J19
IO_L11N_T1U_N9_GC_69_H16
IO_L11P_T1U_N8_GC_69_H17
IO_L10N_T1U_N7_QBC_AD4N_69_K18
IO_L10P_T1U_N6_QBC_AD4P_69_K19
IO_L9N_T1L_N5_AD12N_69_J16
IO_L9P_T1L_N4_AD12P_69_K16
IO_L8N_T1L_N3_AD5N_69_K17
IO_L8P_T1L_N2_AD5P_69_L17
IO_L7N_T1L_N1_QBC_AD13N_69_H15
IO_L7P_T1L_N0_QBC_AD13P_69_J15
IO_T0U_N12_VRP_69_L16
IO_L6N_T0U_N11_AD6N_69_M17
IO_L6P_T0U_N10_AD6P_69_N17
IO_L5N_T0U_N9_AD14N_69_L12
IO_L5P_T0U_N8_AD14P_69_M12
IO_L4N_T0U_N7_DBC_AD7N_69_L14
IO_L4P_T0U_N6_DBC_AD7P_69_L15
IO_L3N_T0L_N5_AD15N_69_M13
IO_L3P_T0L_N4_AD15P_69_N13
IO_L2N_T0L_N3_69_M15
IO_L2P_T0L_N2_69_N15
IO_L1N_T0L_N1_DBC_69_M14
IO_L1P_T0L_N0_DBC_69_N14
VREF_69_N16
D19
A16
A17
D15
D16
B17
B18
C16
C17
A19
B19
C18
D18
E19
E17
E18
E16
F16
F19
G19
F15
G15
G18
H18
F17
G17
M18
J18
J19
H16
H17
K18
K19
J16
K16
K17
L17
H15
J15
L16
M17
N17
L12
M12
L14
L15
M13
N13
M15
N15
M14
N14
N16
VRP_69
PL_DDR4_PARITY
PL_DDR4_CKE
PL_DDR4_RESET_B
PL_DDR4_CAS_B
PL_DDR4_CS_B
PL_DDR4_WE_B
PL_DDR4_ALERT_B
PL_DDR4_BG0
PMOD0_0_LS
PL_DDR4_ACT_B
PL_DDR4_ODT
PL_DDR4_RAS_B
PL_DDR4_A0
PL_DDR4_A1
PL_DDR4_A2
PL_DDR4_A3
PL_DDR4_A4
PL_DDR4_A5
PL_DDR4_A6
PL_DDR4_A7
PL_DDR4_A8
PL_DDR4_A9
PL_DDR4_A10
PL_DDR4_A11
PL_DDR4_CK0_C
PL_DDR4_CK0_T
PMOD0_1_LS
USER_SI570_N
USER_SI570_P
PMOD0_2_LS
PMOD0_3_LS
PL_DDR4_BA0
PL_DDR4_BA1
PMOD0_4_LS
PMOD0_5_LS
PL_DDR4_A12
PL_DDR4_A13
PMOD0_6_LS
PMOD0_7_LS
MSP430_GPIO_PL_0_LS
MSP430_GPIO_PL_1_LS
MSP430_GPIO_PL_2_LS
MSP430_GPIO_PL_3_LS
PMOD1_0_LS
PMOD1_1_LS
PMOD1_2_LS
PMOD1_3_LS
PMOD1_4_LS
PMOD1_5_LS
PMOD1_6_LS
PMOD1_7_LS
VCC1V2
E15
F18
J17
VCCO_69_E15
VCCO_69_F18
VCCO_69_J17
U1-23
XCZU28DR-2FFVG1517E
R52
1.00K
R14
240
VRP_69
USER_SI570_P
USER_SI570_N
R12
100
XILINX
2100 Logic Drive
San Jose, CA 95124
PCB P/N : 1280976
ASSY P/N : 0432076
TEST P/N : TSS0192
Title: HW-Z1-ZCU111
006 Zynq Bank 68 69
Ver 1.0
Size B
Date Modified: Tuesday, May 29, 2018
Document Number: 0381811
Rev 01
Engineer: BF
Sheet 6 of 75

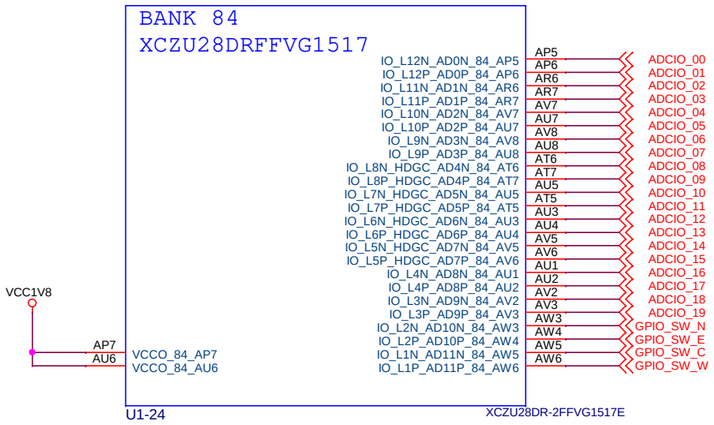

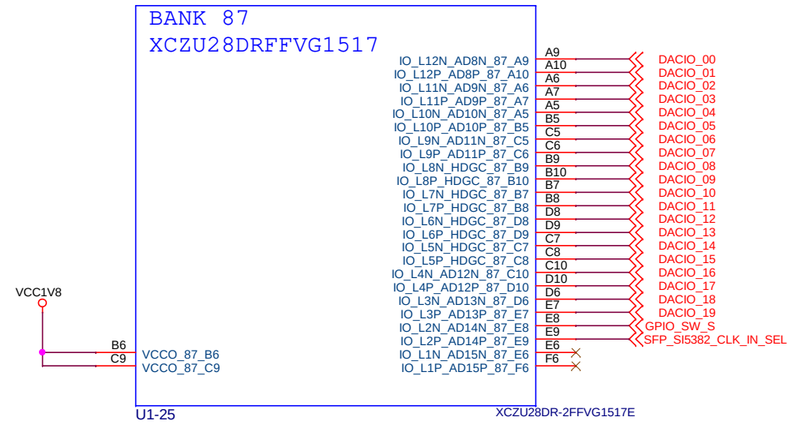

XILINX
2100 Logic Drive
San Jose, CA 95124

PCB P/N : 1280976
ASSY P/N : 0432076
TEST P/N : TSS0192

Title: HW-Z1-ZCU111
007 Zynq Banks 84 87

Ver 1.0

Size B | Date Modified: Tuesday, May 29, 2018 | Document Number: 0381811 | Rev 01

Engineer: BF

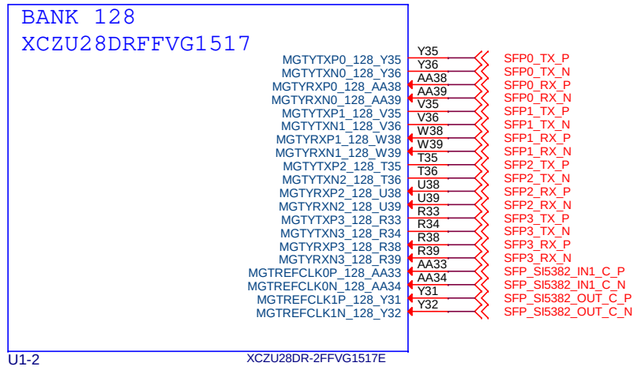

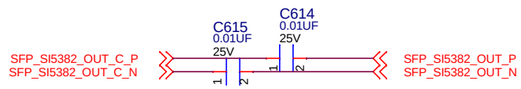

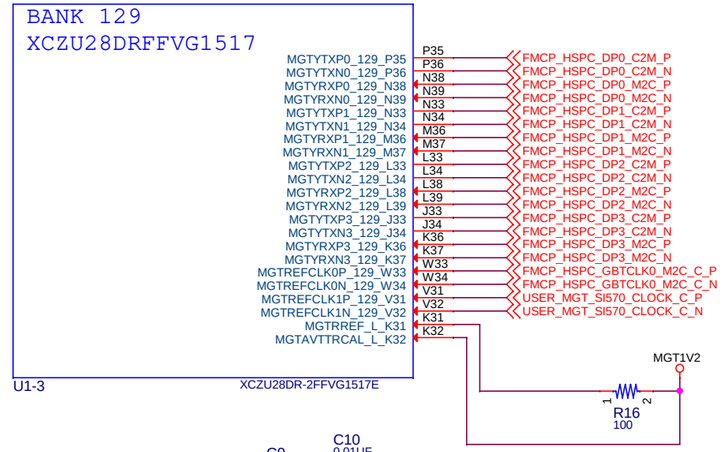

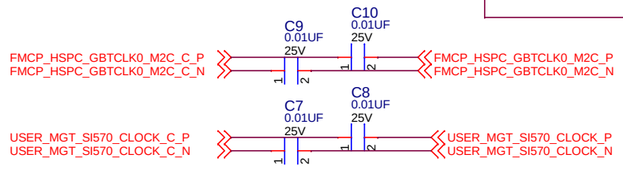

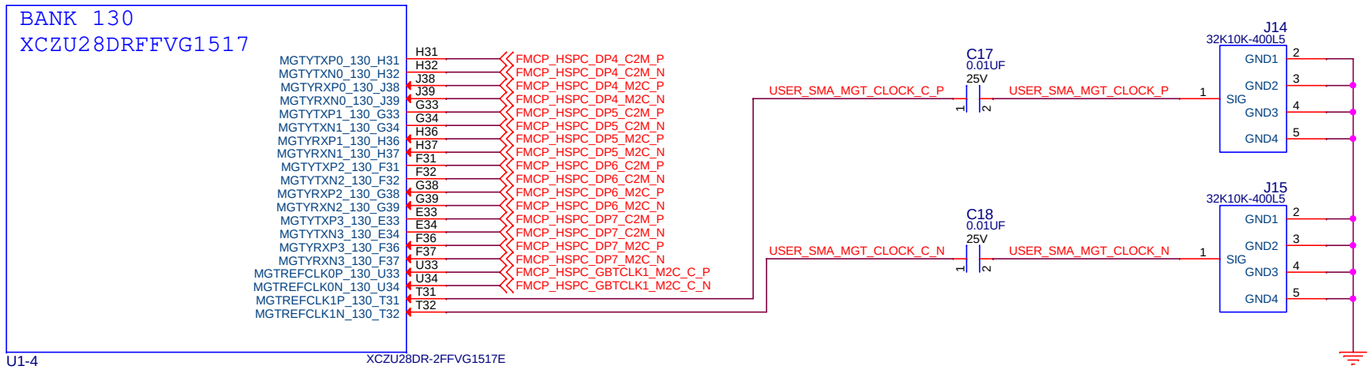

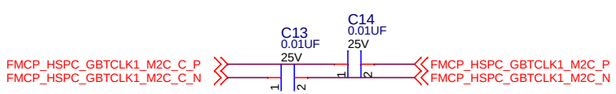

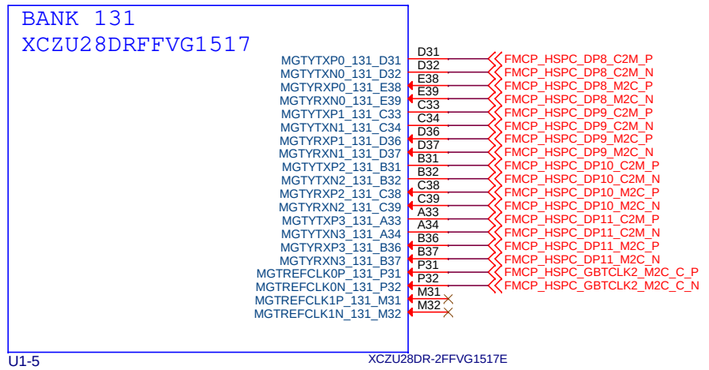

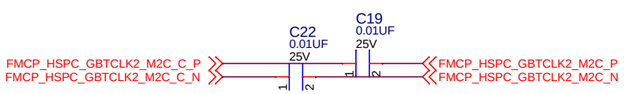

XILINX
2100 Logic Drive
San Jose, CA 95124

PCB P/N : 1280976
ASSY P/N : 0432076
TEST P/N : TSS0192

Title: HW-Z1-ZCU111
008 Zynq Bank 128 129 130 131

Ver 1.0

Size B | Date Modified: Tuesday, May 29, 2018 | Document Number: 0381811 | Rev 01

Engineer: BF | Sheet 8 of 75

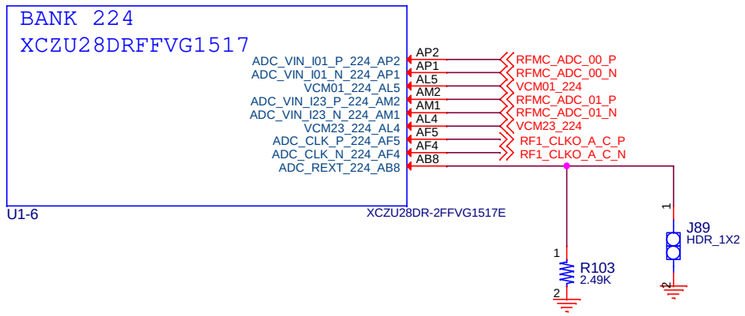

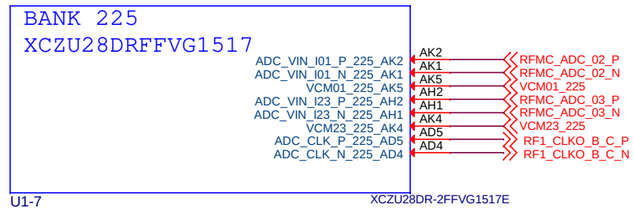

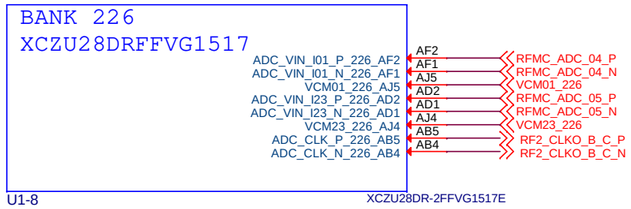

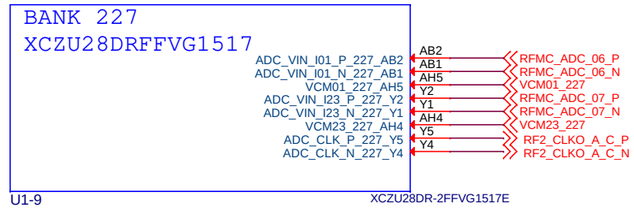

XILINX
2100 Logic Drive
San Jose, CA 95124

PCB P/N : 1280976
ASSY P/N : 0432076
TEST P/N : TSS0192

Title: HW-Z1-ZCU111
009 Zynq Banks 224 225 226 227

Ver 1.0

Size B | Date Modified: Tuesday, May 29, 2018 | Document Number: 0381811 | Rev 01

Engineer: BF



XILINX
2100 Logic Drive
San Jose, CA 95124

PCB P/N : 1280976
ASSY P/N : 0432076
TEST P/N : TSS0192

Title: HW-Z1-ZCU111
010 Zynq Banks 228 229

Ver 1.0

Size B | Date Modified: Tuesday, May 29, 2018 | Document Number: 0381811 | Rev 01

Engineer: BF | Sheet 10 of 75

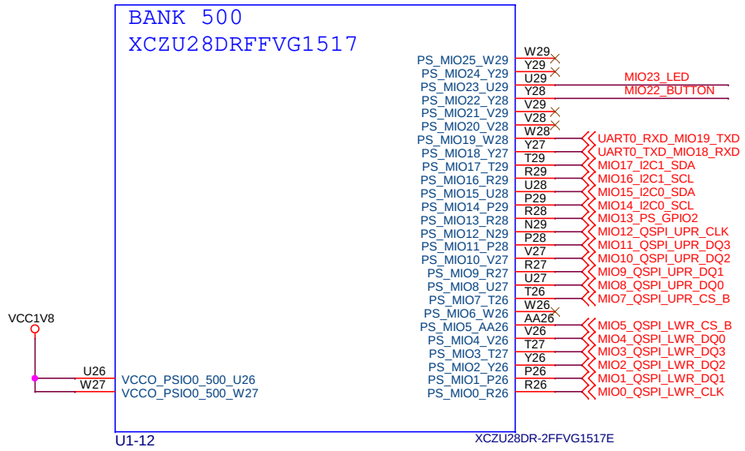

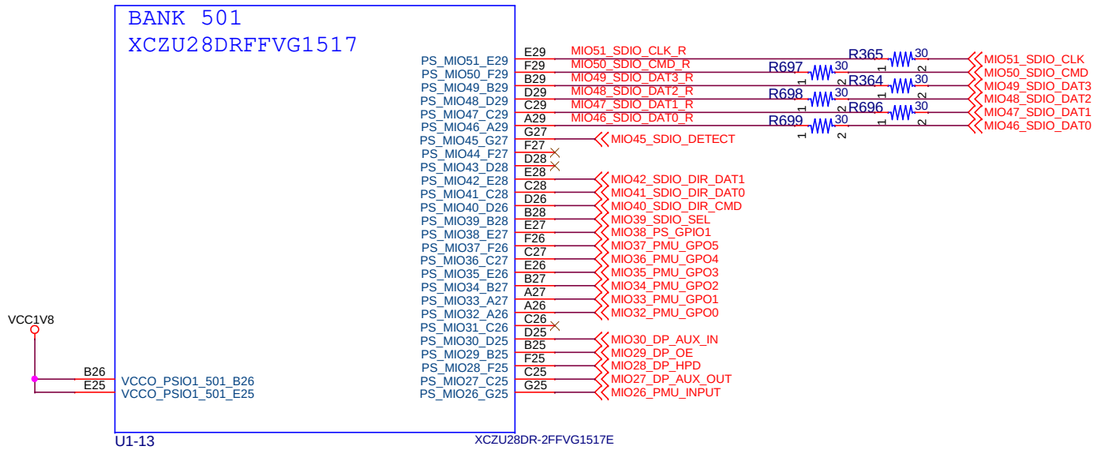

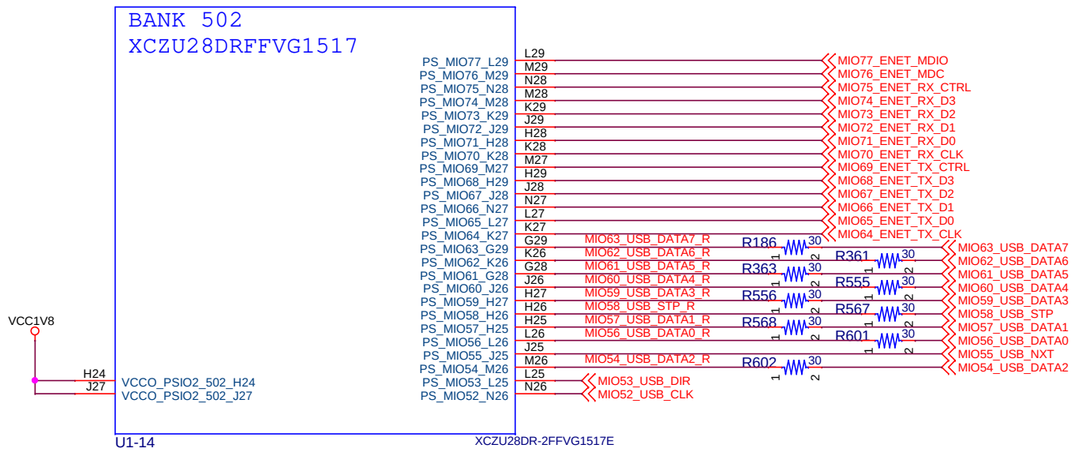

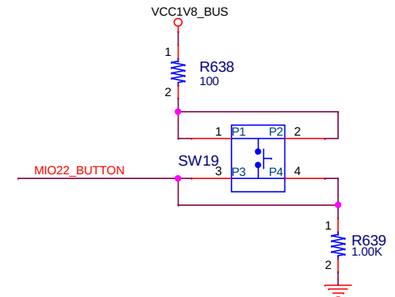

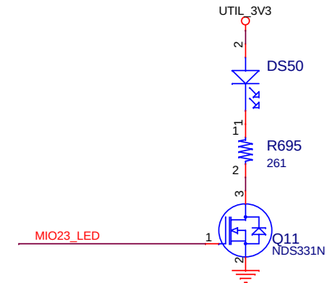

XILINX
2100 Logic Drive
San Jose, CA 95124

PCB P/N : 1280976
ASSY P/N : 0432076
TEST P/N : TSS0192

Title: HW-Z1-ZCU111
011 Zynq Bank 500 501 502 - MIO

Ver 1.0

Size B | Date Modified: Tuesday, May 29, 2018 | Document Number: 0381811 | Rev 01

Engineer: BF | Sheet 11 of 75

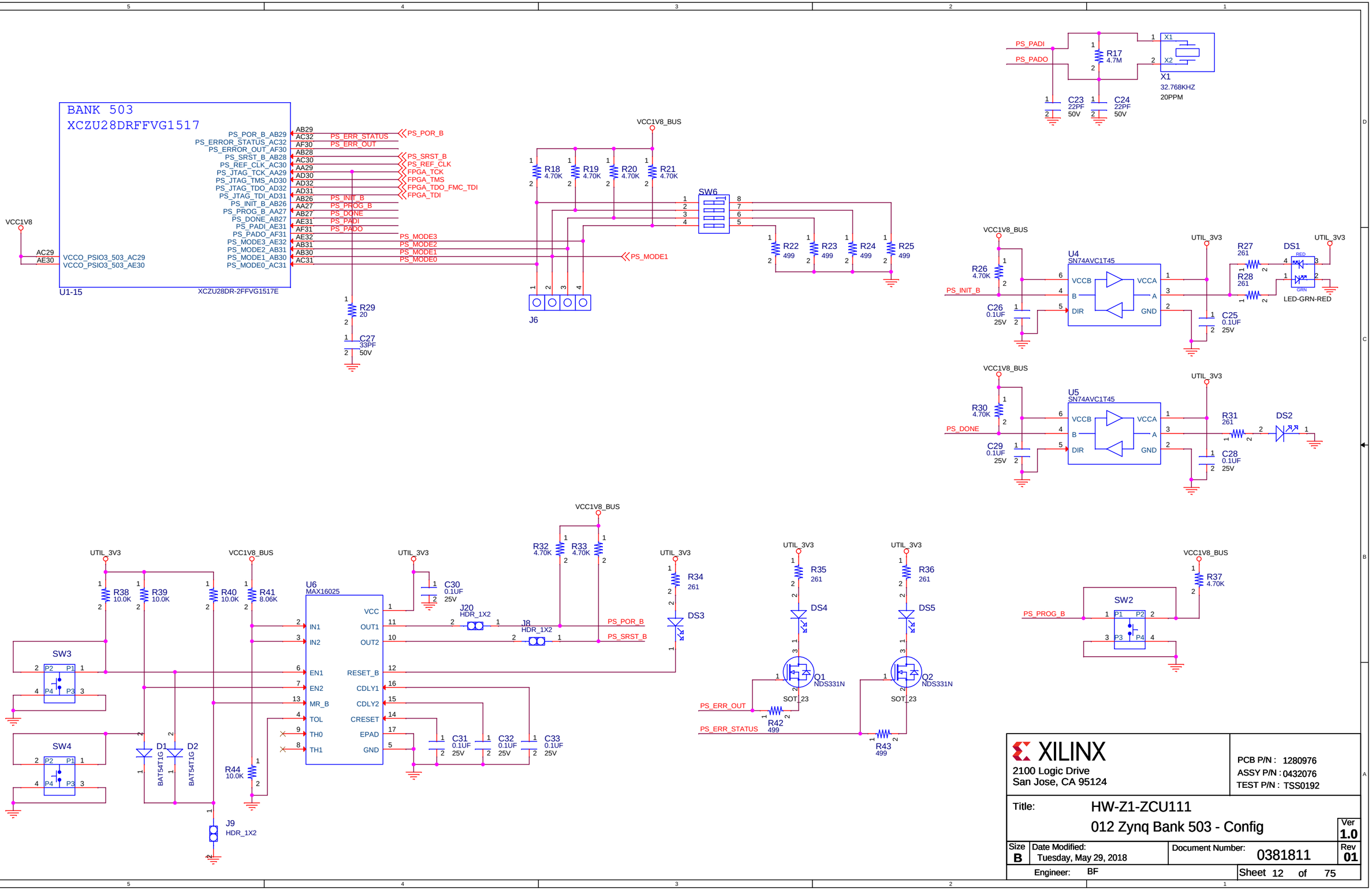
BANK 503
XCZU28DRFFVG1517
U1-15
XCZU28DR-2FFVG1517
PS_POR_B_AB29
PS_ERROR_STATUS_AC32
PS_ERROR_OUT_AF30
PS_SRST_B_AB28
PS_REF_CLK_AC30
PS_JTAG_TCK_AA29
PS_JTAG_TMS_AD30
PS_JTAG_TDO_AD32
PS_JTAG_TDI_AD31
PS_INIT_B_AB26
PS_PROG_B_AA27
PS_DONE_AB27
PS_PADI_AE31
PS_PADO_AF31
PS_MODE3_AE32
PS_MODE2_AB31
PS_MODE1_AB30
PS_MODE0_AC31
VCCO_PSIO3_503_AC29
VCCO_PSIO3_503_AE30
VCC1V8
PS_POR_B
PS_ERR_STATUS
PS_ERR_OUT
PS_SRST_B
PS_REF_CLK
FPGA_TCK
FPGA_TMS
FPGA_TDO_FMC_TDI
FPGA_TDI
PS_INIT_B
PS_PROG_B
PS_DONE
PS_PADI
PS_PADO
PS_MODE3
PS_MODE2
PS_MODE1
PS_MODE0
R29 20
C27 33PF 50V
R18 4.70K
R19 4.70K
R20 4.70K
R21 4.70K
SW6
R22 499
R23 499
R24 499
R25 499
J6
PS_PADI
PS_PADO
R17 4.7M
X1
X2
X1 32.768KHZ 20PPM
C23 22PF 50V
C24 22PF 50V
U4
SN74AVC1T45
VCCB
VCCA
DIR
GND
R26 4.70K
C26 0.1UF 25V
C25 0.1UF 25V
R27 261
R28 261
DS1
LED-GRN-RED
U5
R30 4.70K
C29 0.1UF 25V
C28 0.1UF 25V
R31 261
DS2
SW3
SW4
D1 BAT54T1G
D2 BAT54T1G
U6
MAX16025
VCC
OUT1
OUT2
EN1
EN2
MR_B
TOL
TH0
TH1
RESET_B
CDLY1
CDLY2
CRESET
EPAD
GND
R38 10.0K
R39 10.0K
R40 10.0K
R41 8.06K
R44 10.0K
J9 HDR_1X2
J20 HDR_1X2
J8 HDR_1X2
C30 0.1UF 25V
C31 0.1UF 25V
C32 0.1UF 25V
C33 0.1UF 25V
R32 4.70K
R33 4.70K
R34 261
DS3
R35 261
DS4
R36 261
DS5
Q1 NDS331N
Q2 NDS331N
SOT_23
R42 499
R43 499
SW2
R37 4.70K
XILINX
2100 Logic Drive
San Jose, CA 95124
PCB P/N : 1280976
ASSY P/N : 0432076
TEST P/N : TSS0192
Title: HW-Z1-ZCU111
012 Zynq Bank 503 - Config
Ver 1.0
Size B
Date Modified: Tuesday, May 29, 2018
Document Number: 0381811
Rev 01
Engineer: BF
Sheet 12 of 75

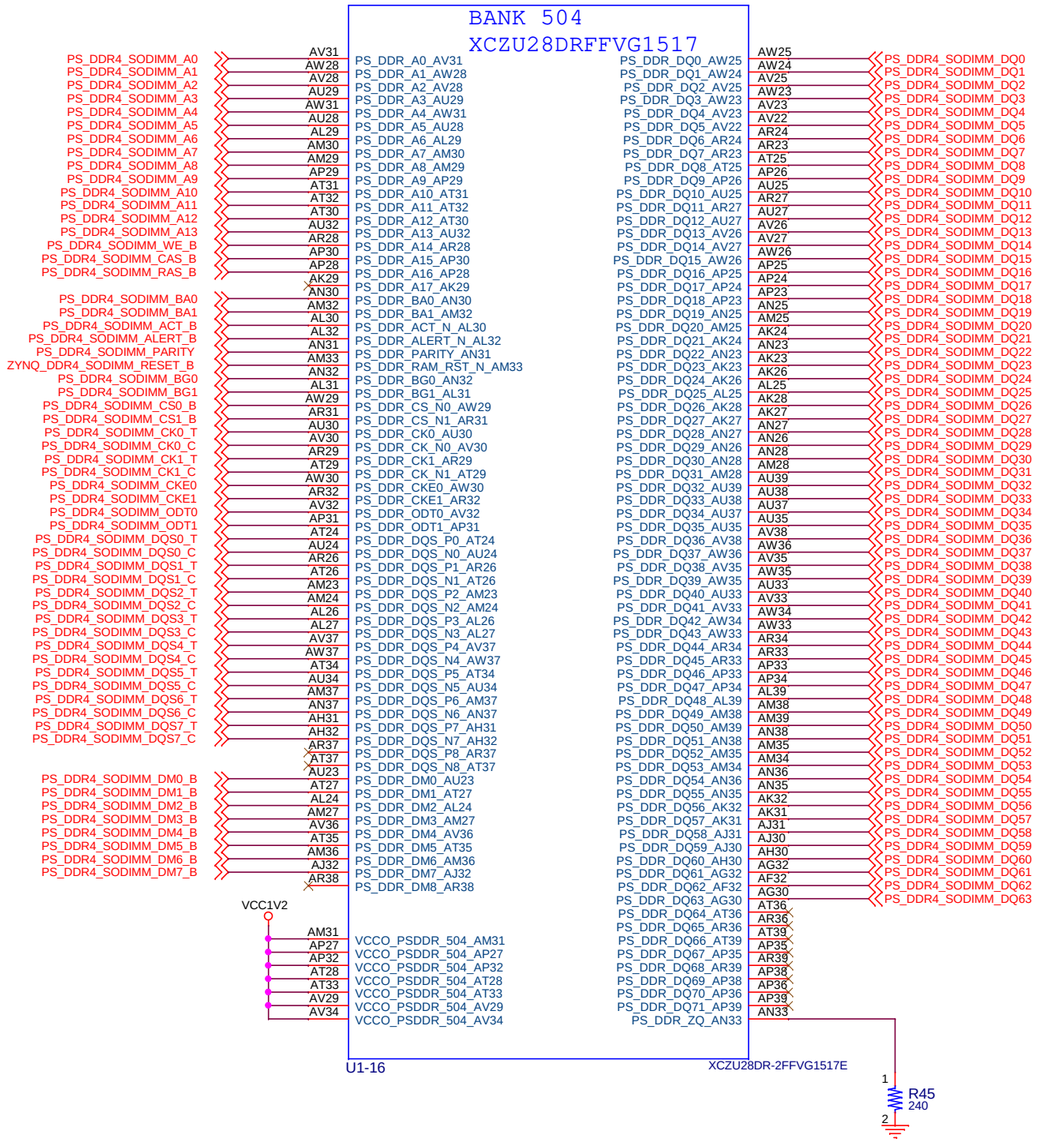

XILINX
2100 Logic Drive
San Jose, CA 95124

PCB P/N : 1280976
ASSY P/N : 0432076
TEST P/N : TSS0192

Title: HW-Z1-ZCU111
013 Zynq Bank 504 - Memory

Ver 1.0

Size B | Date Modified: Tuesday, May 29, 2018 | Document Number: 0381811 | Rev 01

Engineer: BF | Sheet 13 of 75

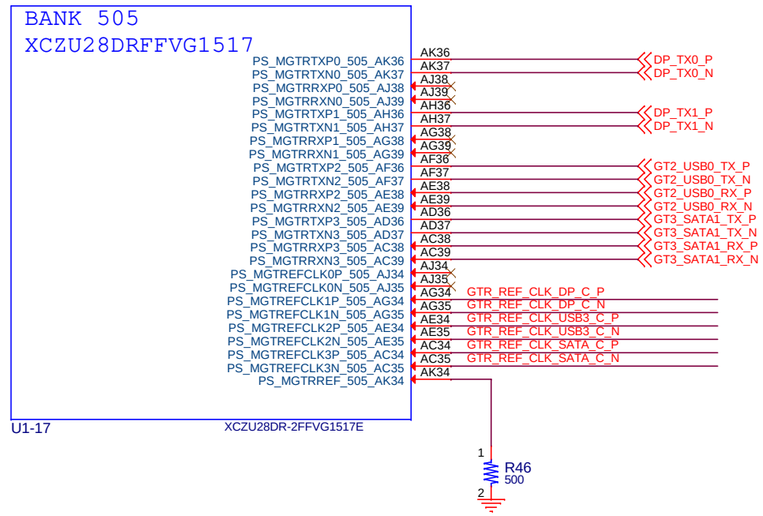

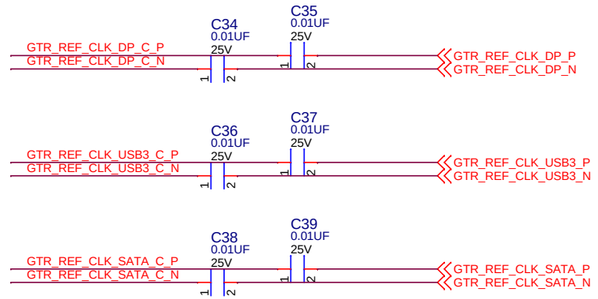

XILINX
2100 Logic Drive
San Jose, CA 95124

PCB P/N : 1280976
ASSY P/N : 0432076
TEST P/N : TSS0192

Title: HW-Z1-ZCU111
014 Zynq Bank 505 - GTR

Ver 1.0

Size B | Date Modified: Tuesday, May 29, 2018 | Document Number: 0381811 | Rev 01

Engineer: BF

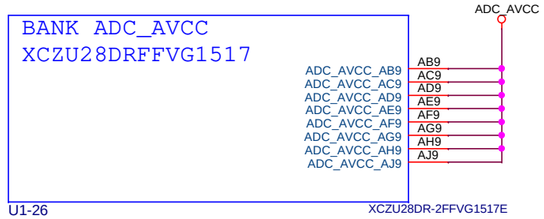

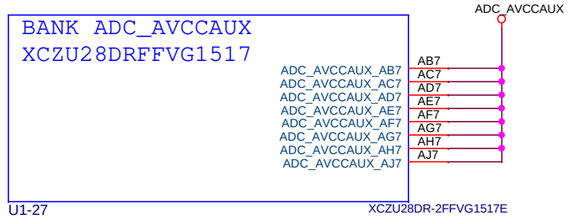

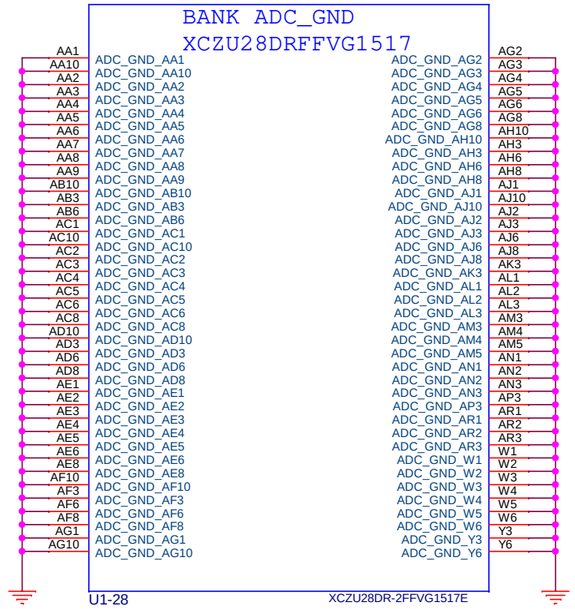

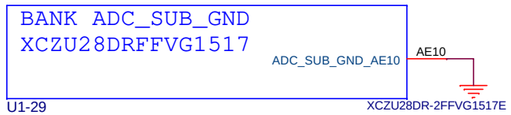

XILINX
2100 Logic Drive
San Jose, CA 95124

PCB P/N : 1280976
ASSY P/N : 0432076
TEST P/N : TSS0192

Title: HW-Z1-ZCU111
015 Zynq ADC Power

Ver 1.0

Size	Date Modified:	Document Number:	Rev
B	Tuesday, May 29, 2018	0381811	01

Engineer: BF

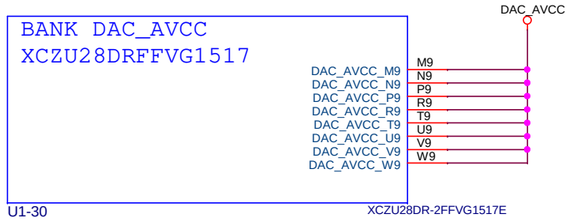

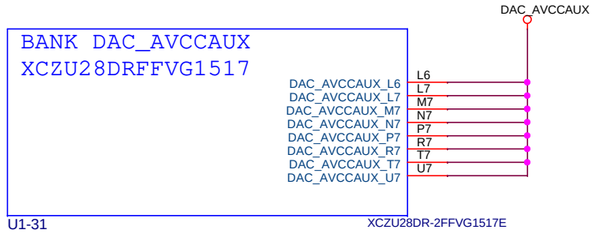

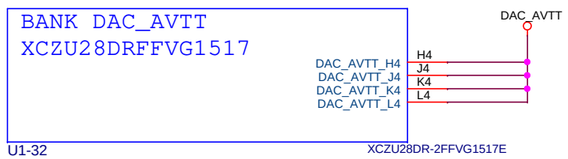

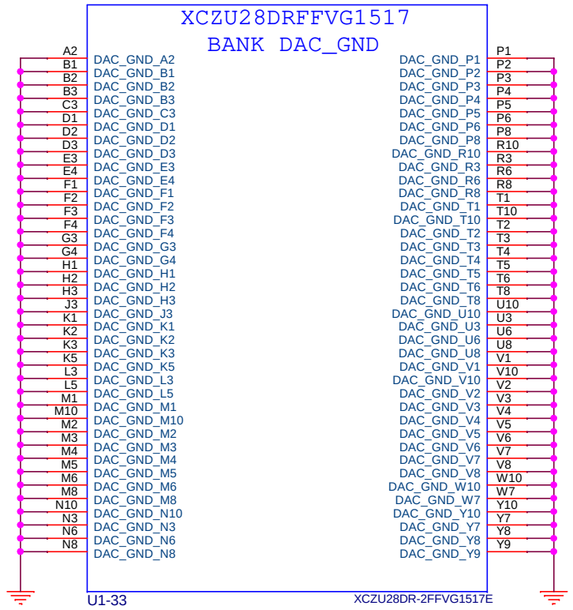



XILINX
2100 Logic Drive
San Jose, CA 95124

PCB P/N : 1280976
ASSY P/N : 0432076
TEST P/N : TSS0192

Title: HW-Z1-ZCU111
016 Zynq DAC Power

Ver 1.0

Size	Date Modified:	Document Number:	Rev
B	Tuesday, May 29, 2018	0381811	01

Engineer: BF

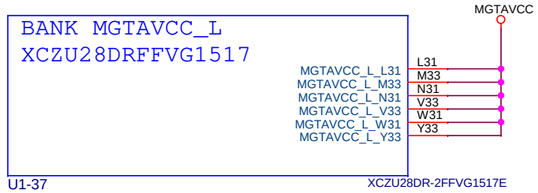

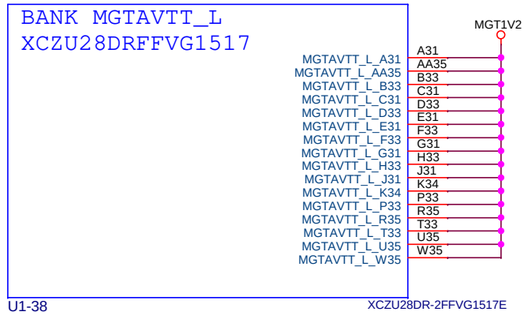

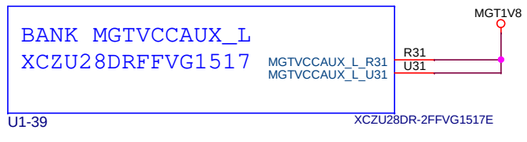

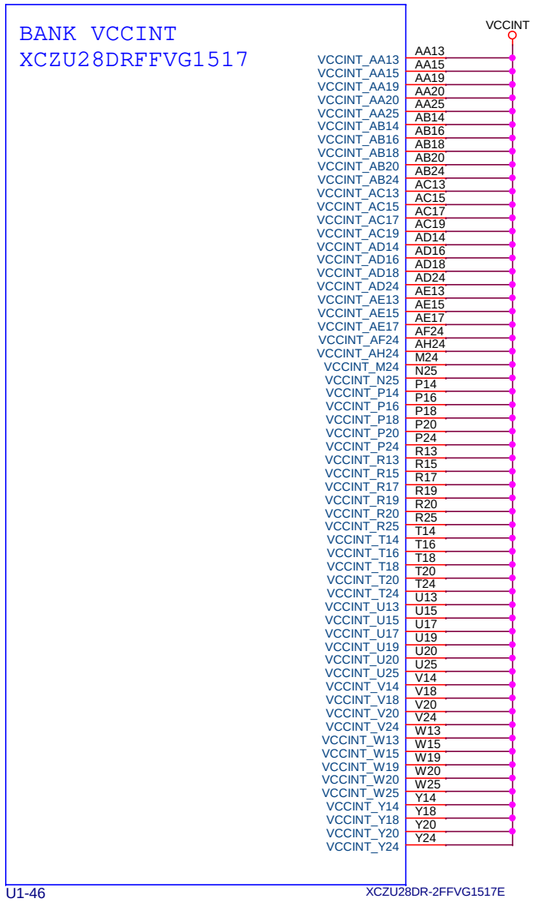

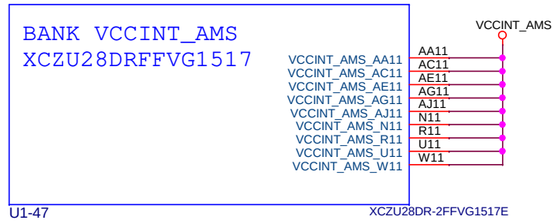

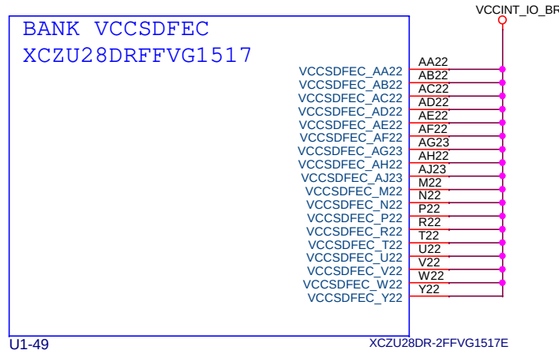

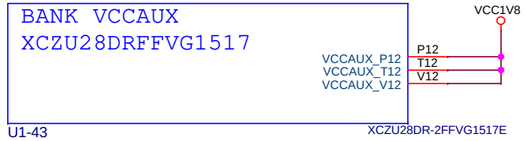



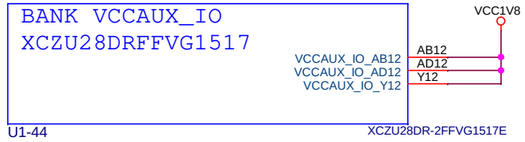

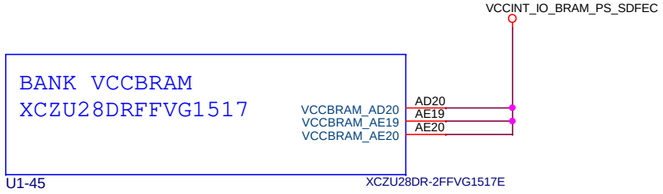

XILINX
2100 Logic Drive
San Jose, CA 95124

PCB P/N : 1280976
ASSY P/N : 0432076
TEST P/N : TSS0192

Title: HW-Z1-ZCU111
017 Zynq Power 1

Ver 1.0

Size B | Date Modified: Tuesday, May 29, 2018 | Document Number: 0381811 | Rev 01

Engineer: BF | Sheet 17 of 75

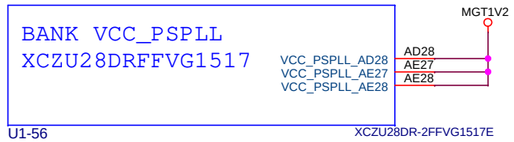

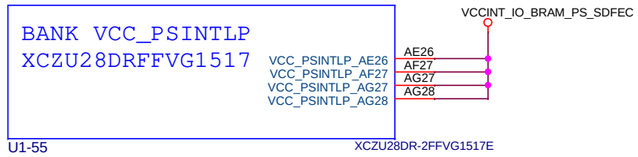

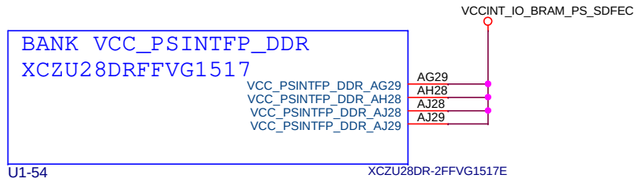

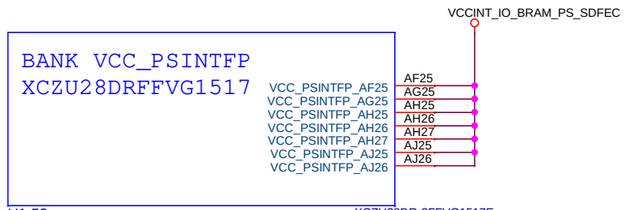

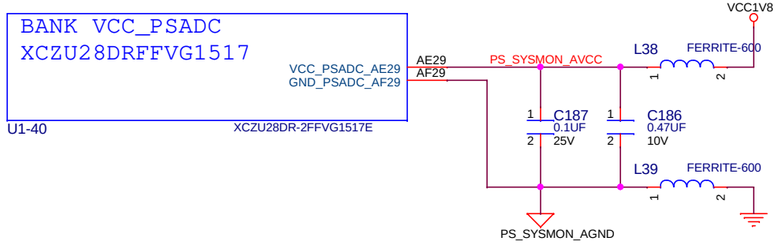

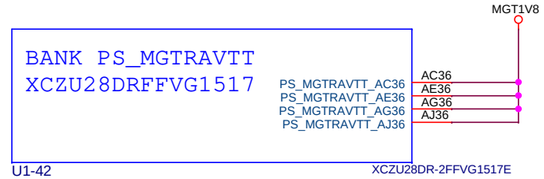

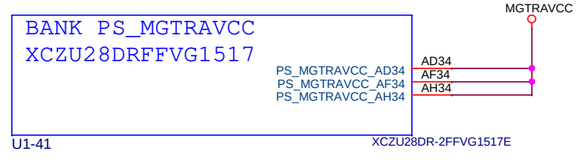

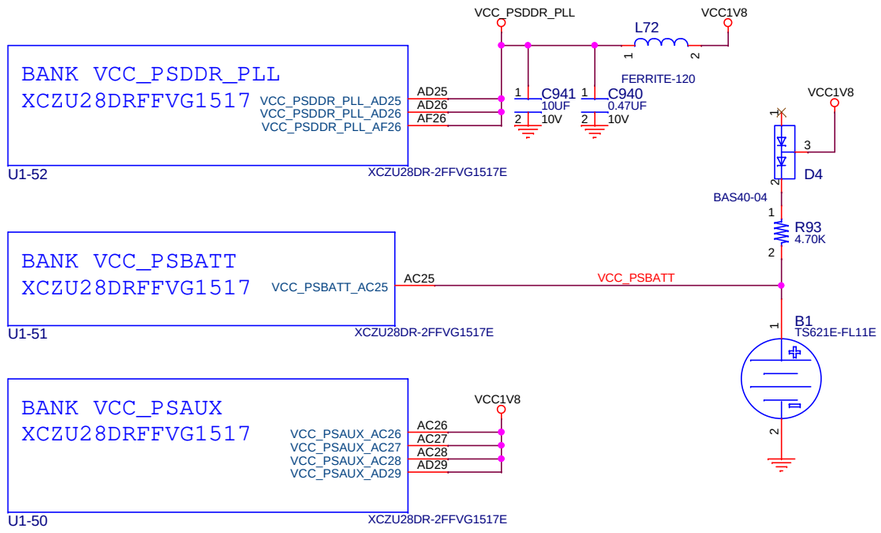

XILINX
2100 Logic Drive
San Jose, CA 95124

PCB P/N : 1280976
ASSY P/N : 0432076
TEST P/N : TSS0192

Title: HW-Z1-ZCU111
018 Zynq Power 2

Ver 1.0

Size B | Date Modified: Tuesday, May 29, 2018 | Document Number: 0381811 | Rev 01

Engineer: BF | Sheet 18 of 75

VCCINT

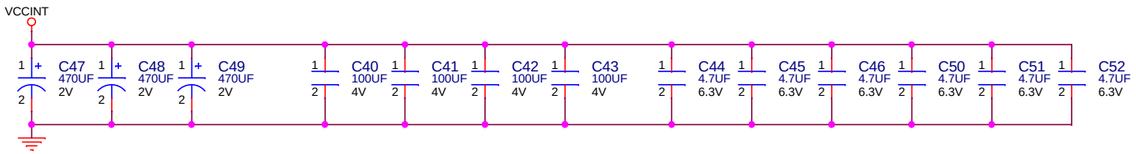

Per John R. 5/3/17: Use UG582 caps for XCZU29DR-FFVF1760

VCCBRAM/VCCPSINTLP/VCCPSINTFP/VCCSDFEC

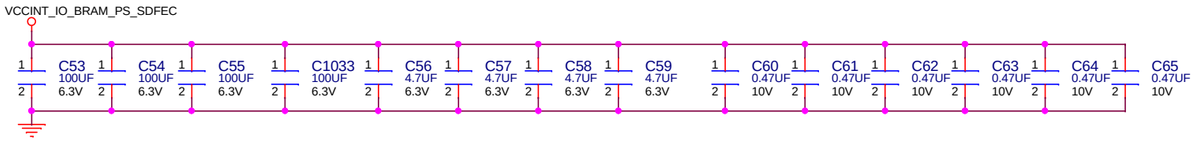

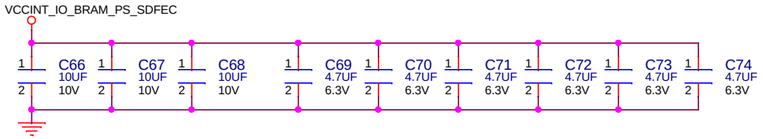

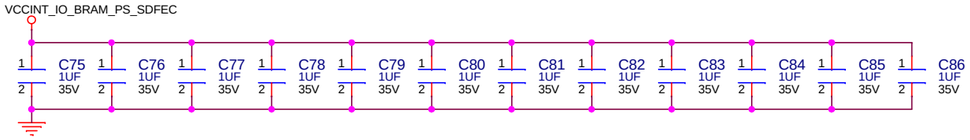

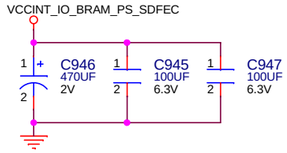

VCCAUX/VCCPSAUX

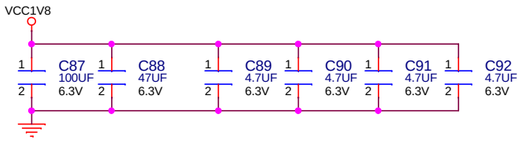

VCCO/VCCODDR

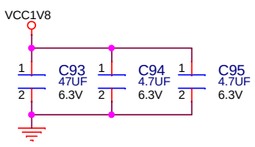

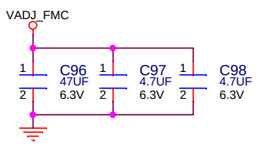

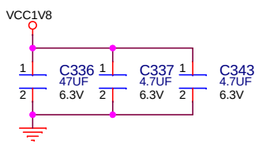

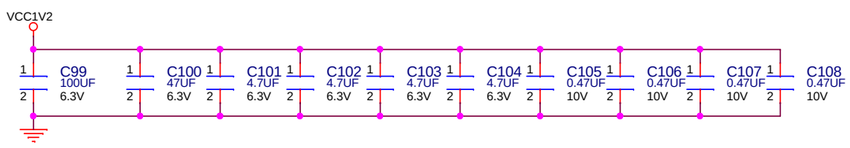

VCCOPSIO

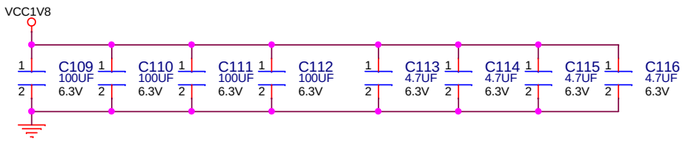

VCC_PSPLL

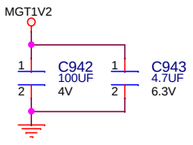

XILINX
2100 Logic Drive
San Jose, CA 95124

PCB P/N : 1280976
ASSY P/N : 0432076
TEST P/N : TSS0192

Title: HW-Z1-ZCU111
019 Zynq Decoupling

Ver 1.0

Size B | Date Modified: Tuesday, May 29, 2018 | Document Number: 0381811 | Rev 01

Engineer: BF | Sheet 19 of 75

VCCINT_AMS
(Infineon added 100uf, 47uf)

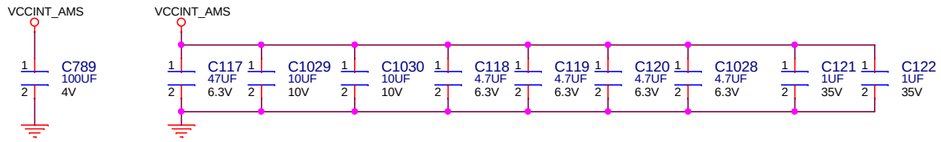

ADC_AVCC

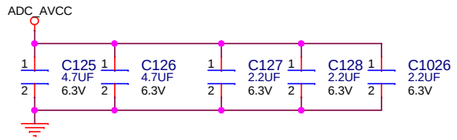

DAC_AVCC

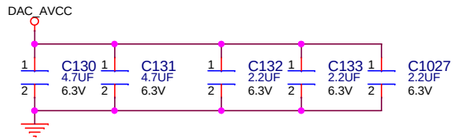

ADC_AVCCAUX
(Infineon added 12x 10uf)

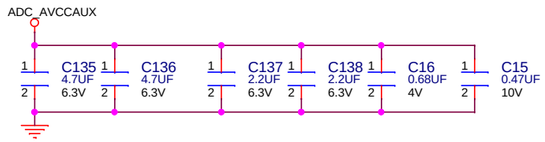

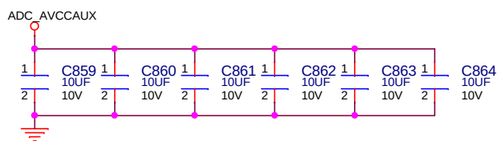

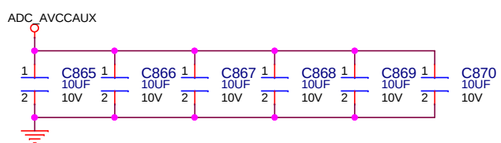

DAC_AVCCAUX

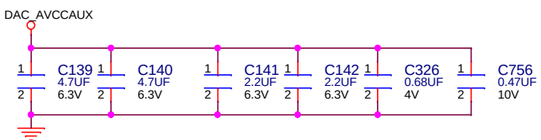

DAC_AVTT

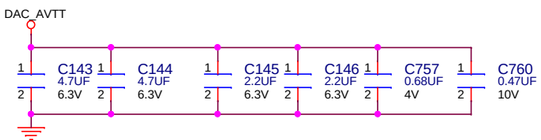

MGTAVCC
(Infineon added 2x 47uf 3x 22uf, DNPs)

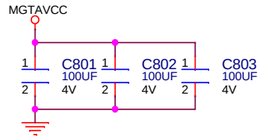

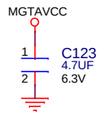

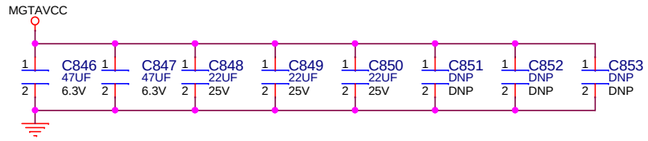

MGTAVTT/VCCPSPLL

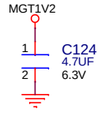

MGTRAVCC

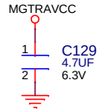

MGTVCCAUX/MGTRAVTT

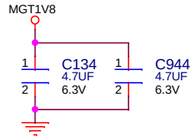

XILINX
2100 Logic Drive
San Jose, CA 95124

PCB P/N : 1280976
ASSY P/N : 0432076
TEST P/N : TSS0192

Title: HW-Z1-ZCU111
020 Zynq Decoupling 2

Ver 1.0

Size B | Date Modified: Tuesday, May 29, 2018 | Document Number: 0381811 | Rev 01

Engineer: BF | Sheet 20 of 75

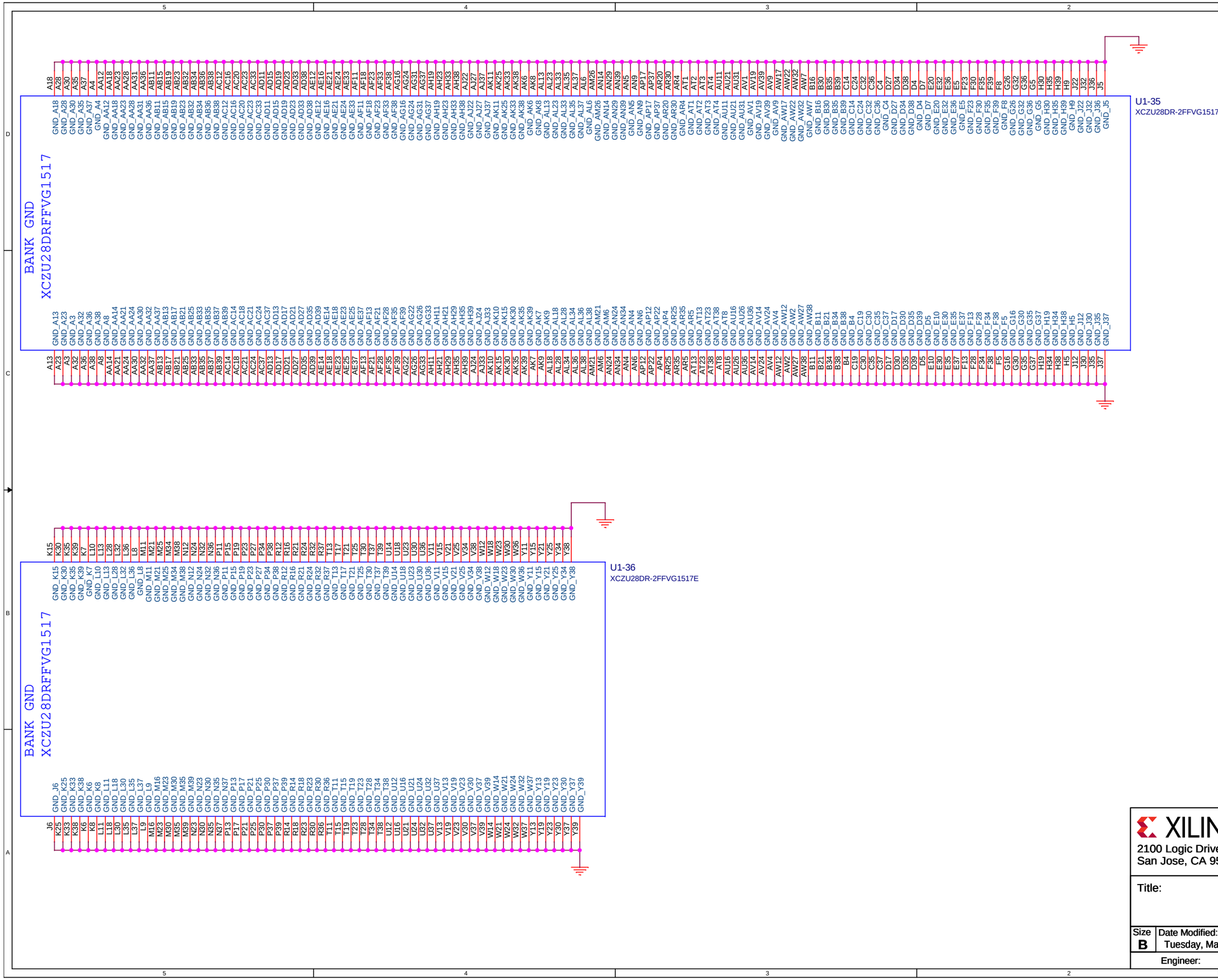

XILINX
2100 Logic Drive
San Jose, CA 95124

PCB P/N : 1280976
ASSY P/N : 0432076
TEST P/N : TSS0192

Title: HW-Z1-ZCU111
021 Zynq GND

Ver 1.0

Size	Date Modified:	Document Number:	Rev
B	Tuesday, May 29, 2018	0381811	01

Engineer: BF

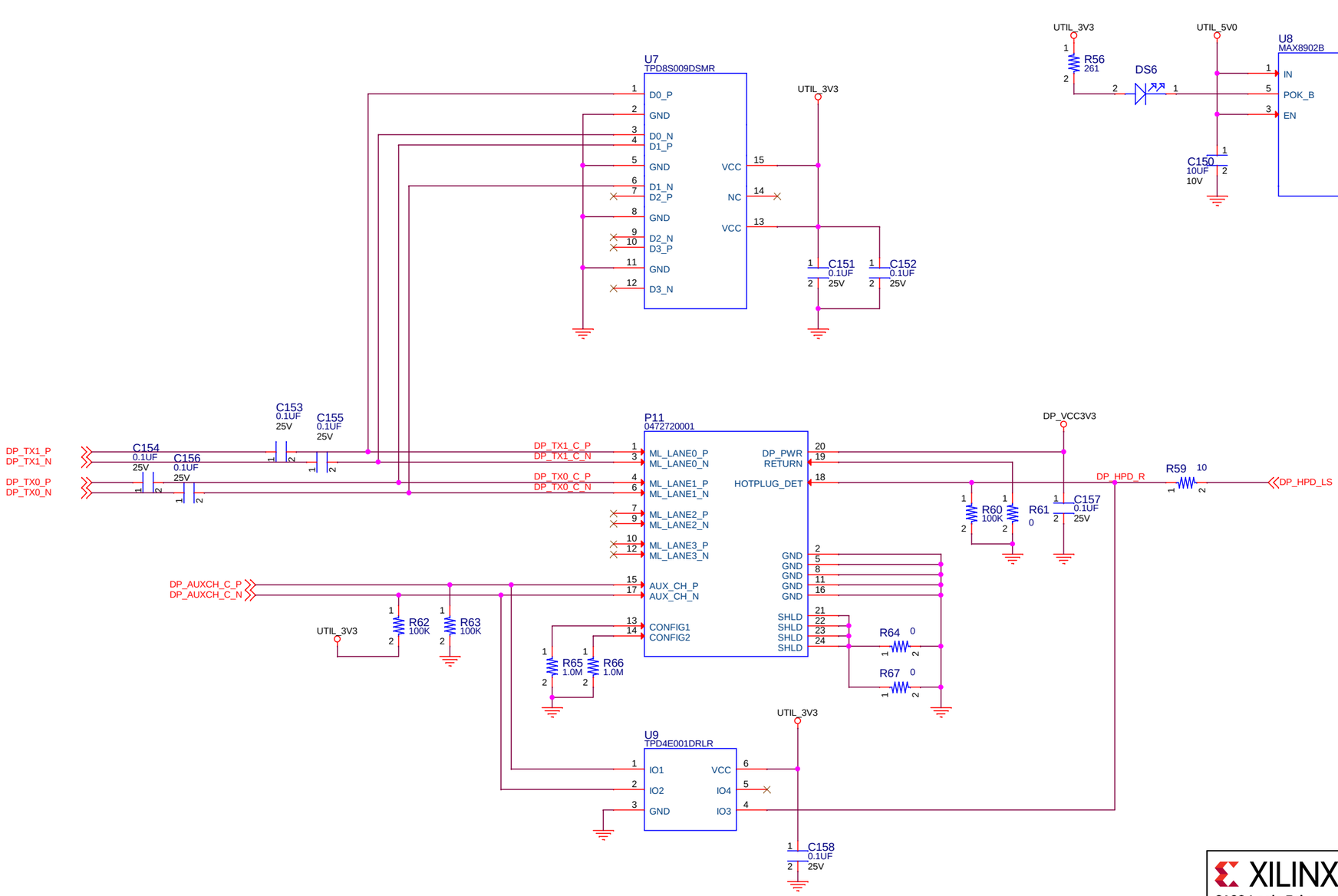

XILINX
2100 Logic Drive
San Jose, CA 95124

PCB P/N : 1280976
ASSY P/N : 0432076
TEST P/N : TSS0192

Title: HW-Z1-ZCU111
022 Display Port Connector

Ver 1.0

Size	Date Modified:	Document Number:	Rev
B	Tuesday, May 29, 2018	0381811	01

Engineer: BF

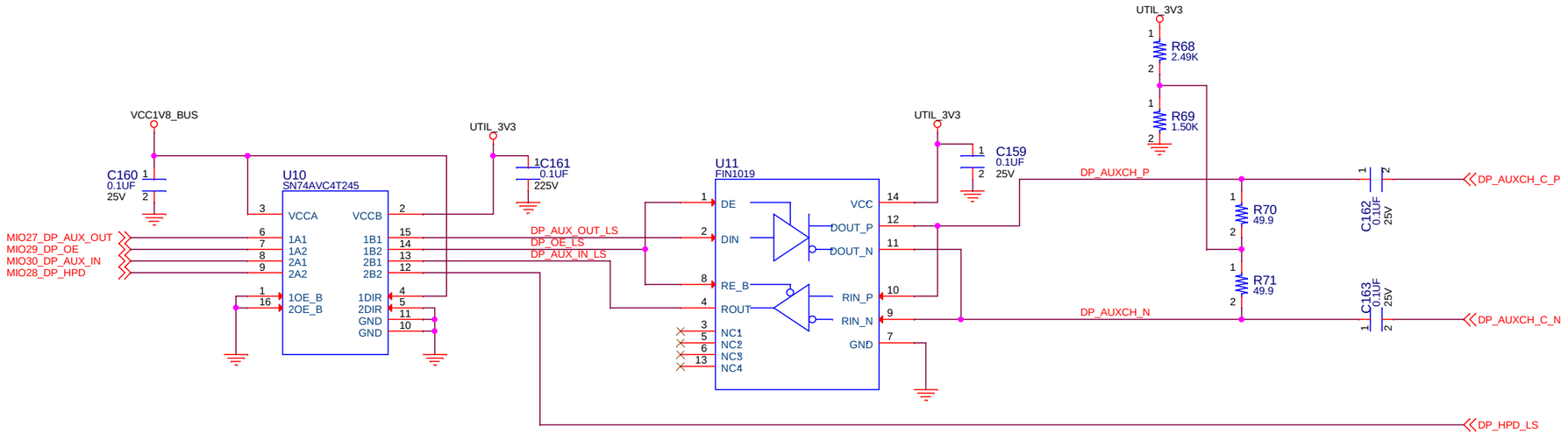

XILINX
2100 Logic Drive
San Jose, CA 95124

PCB P/N : 1280976
ASSY P/N : 0432076
TEST P/N : TSS0192

Title: HW-Z1-ZCU111
023 Display Port IO

Ver 1.0

Size B | Date Modified: Tuesday, May 29, 2018 | Document Number: 0381811 | Rev 01

Engineer: BF | Sheet 23 of 75

CONN STANDARD A USB 3.0 SMT

USB 3.0 AC Coupling for TX

VCC1V8_BUS
C164 0.1UF 25V
C165 0.1UF 25V
C166 0.1UF 25V
U12 USB3320
MIO63_USB_DATA7
MIO62_USB_DATA6
MIO61_USB_DATA5
MIO60_USB_DATA4
MIO59_USB_DATA3
MIO54_USB_DATA2
MIO57_USB_DATA1
MIO56_USB_DATA0
DATA7 DATA6 DATA5 DATA4 DATA3 DATA2 DATA1 DATA0
MIO58_USB_STP
MIO55_NXT
MIO53_USB_DIR
R74 30
STP NXT DIR
MIO52_USB_CLK
CLKOUT
RESETB VDDIO VDD18 VDD18
X2 24.00MHZ
GND4 GND2 X3 X1
30PPM
REFCLK XO REFSEL0 REFSEL1 REFSEL2
R75 1.0M
C173 18PF 50V
C174 18PF 50V
RBIAS
R77 8.06K
VCC1V8_BUS
C177 0.1UF 25V
U28 SN74LVC1G08
VCC GND
PS_POR_B
PS_MODE1
A B AND Y
ULPI0_RST_B
CPEN ID VBUS VBAT VDD33 DP DM SPK_L SPK_R NC CTR_GND
ULPI0_VBUS_3320
ULPI0_VDD33
ULPI0_D_P
ULPI0_D_N
C169 2.2UF 6.3V
C170 0.1UF 25V
UTIL_5V0
R72 10.0K
ULPI0_VBUS_SEL
J18 HDR_1X2
C168 150UF 6.3V
C167 4.7UF 10V
C755 1UF 35V
L3 FERRITE-220
L4 FERRITE-220
J96 692122030100
ULPI0_VBUS_SEL_L
ULPI0_D_N
ULPI0_D_P
ULPI0_CON_GND_L
GT2_USB0_RX_N
GT2_USB0_RX_P
GT2_TX_C_N
GT2_TX_C_P
VBUS D_N D_P GND SSRXN SSRXP GND_DRAIN SSTXN SSTXP SHLD2 SHLD1
J17
C171 DNP DNP
UTIL_3V3
R76 261
DS7
U13 MIC2544A-1YM
EN FLG GND ILM OUT2 IN OUT1 NC
R78 191
UTIL_5V0
C176 0.1UF 25V
C172 0.1UF 25V
GT2_USB0_TX_P
GT2_USB0_TX_N
GT2_TX_C_P
GT2_TX_C_N
C175 25V 0.1UF
U15 TPD4E05U06DQAR
GT2_USB0_RX_P
GT2_USB0_RX_N
D1_P D1_N GND D2_P D2_N NC4 NC3 GND NC2 NC1
GT2_TX_C_P
GT2_TX_C_N
U16 TPD2EUSB30DRTR
GND D_P D_N
ULPI0_D_P
ULPI0_D_N

XILINX
2100 Logic Drive
San Jose, CA 95124

PCB P/N : 1280976
ASSY P/N : 0432076
TEST P/N : TSS0192

Title: HW-Z1-ZCU111
024 USB 3.0

Ver 1.0

Size B | Date Modified: Tuesday, May 29, 2018 | Document Number: 0381811 | Rev 01

Engineer: BF | Sheet 24 of 75

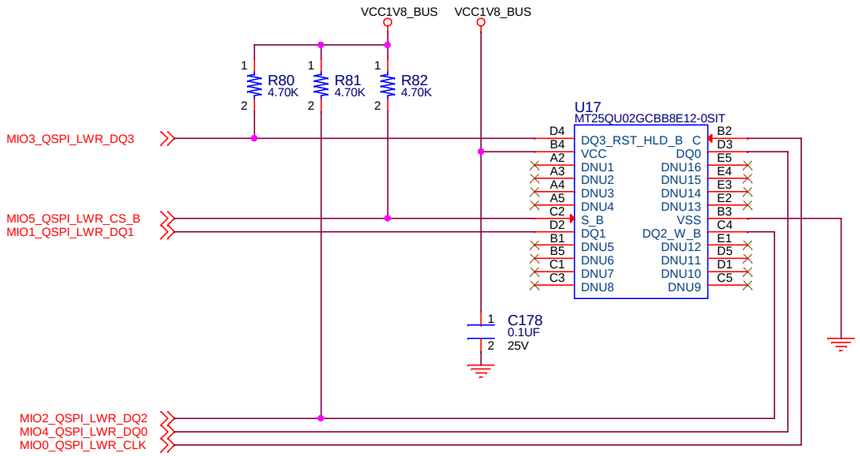

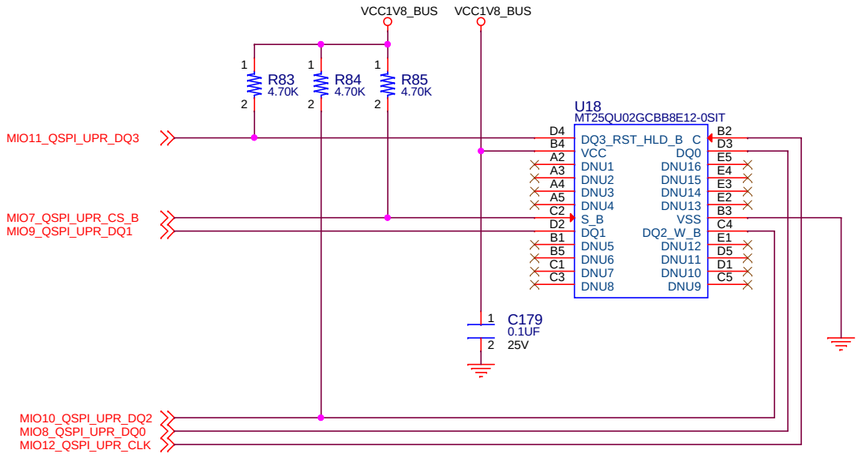

XILINX
2100 Logic Drive
San Jose, CA 95124

PCB P/N : 1280976
ASSY P/N : 0432076
TEST P/N : TSS0192

Title: HW-Z1-ZCU111
025 Dual QSPI

Ver 1.0

Size B | Date Modified: Tuesday, May 29, 2018 | Document Number: 0381811 | Rev 01

Engineer: BF | Sheet 25 of 75

PMBUS Header

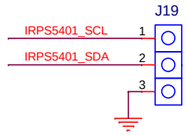

PS I2C0 L/S

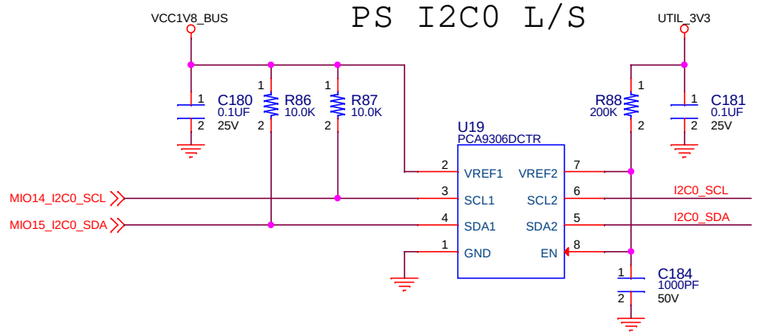

PL I2C0 L/S

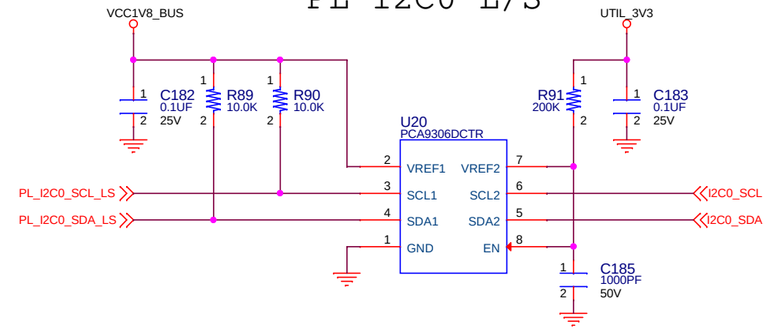

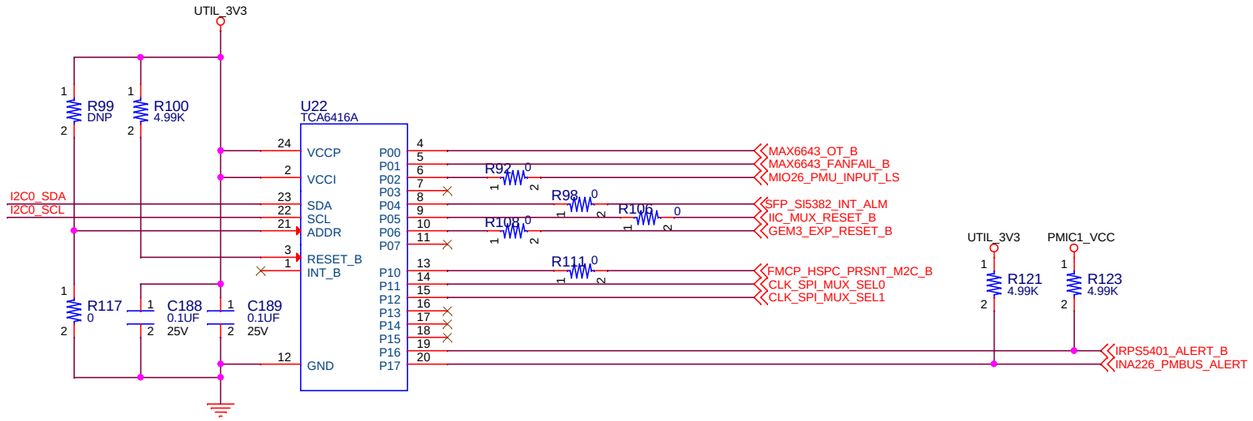

PL SYSMON L/S

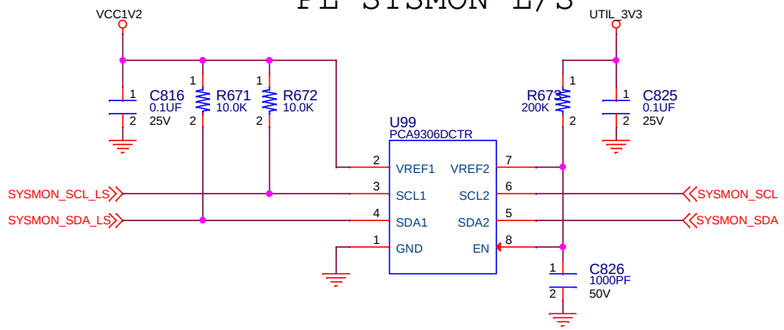

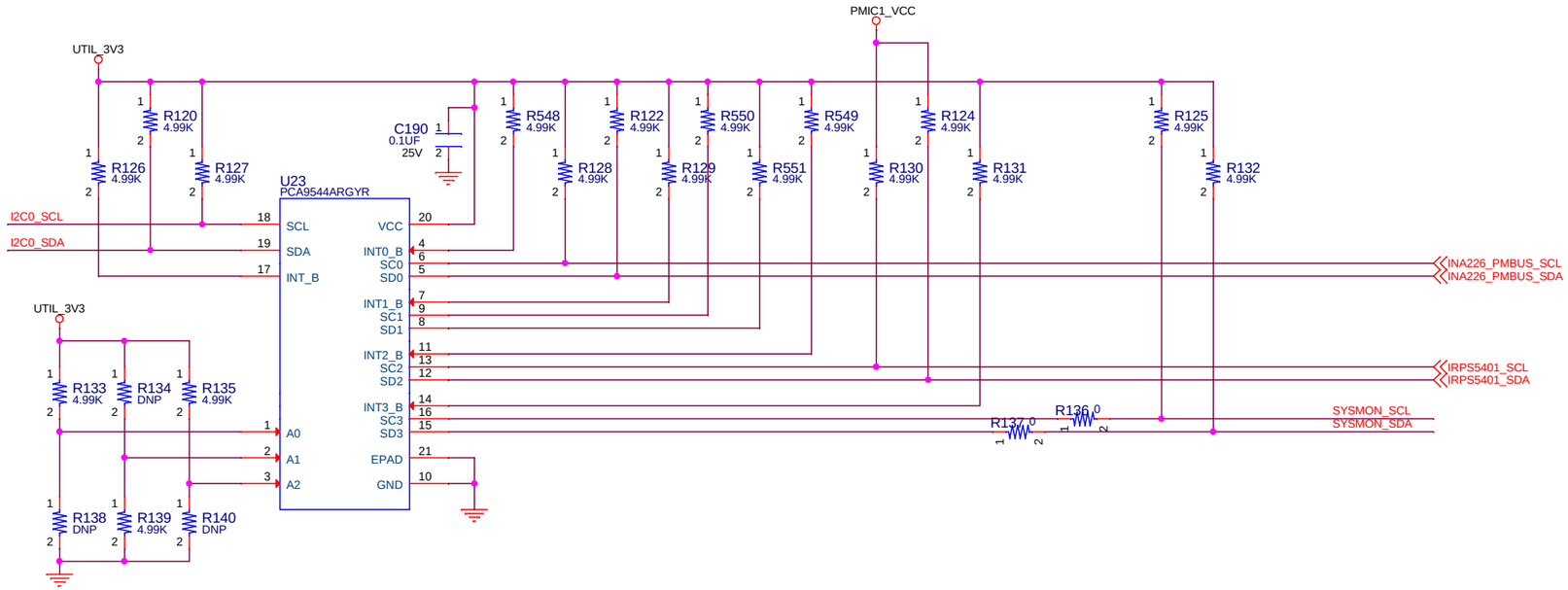

XILINX
2100 Logic Drive
San Jose, CA 95124

PCB P/N : 1280976
ASSY P/N : 0432076
TEST P/N : TSS0192

Title: HW-Z1-ZCU111
026 I2C0

Ver 1.0

Size B | Date Modified: Tuesday, May 29, 2018 | Document Number: 0381811 | Rev 01

Engineer: BF | Sheet 26 of 75

PS I2C1 L/S

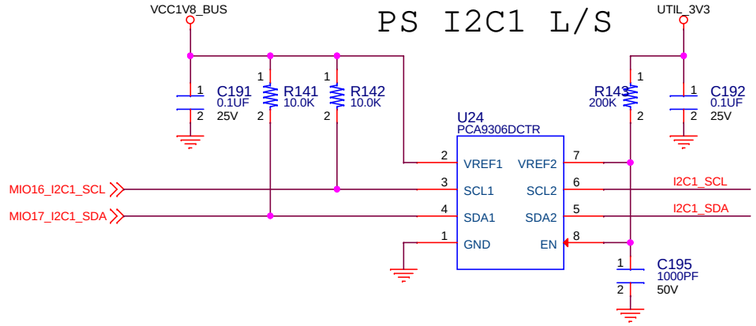

PL I2C1 L/S

Disabled if VCC3V3 is off

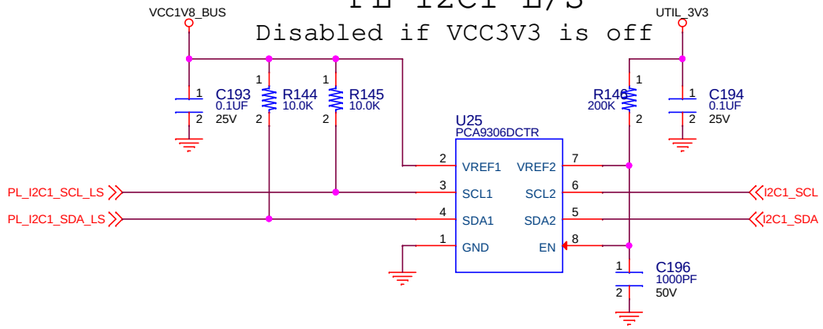

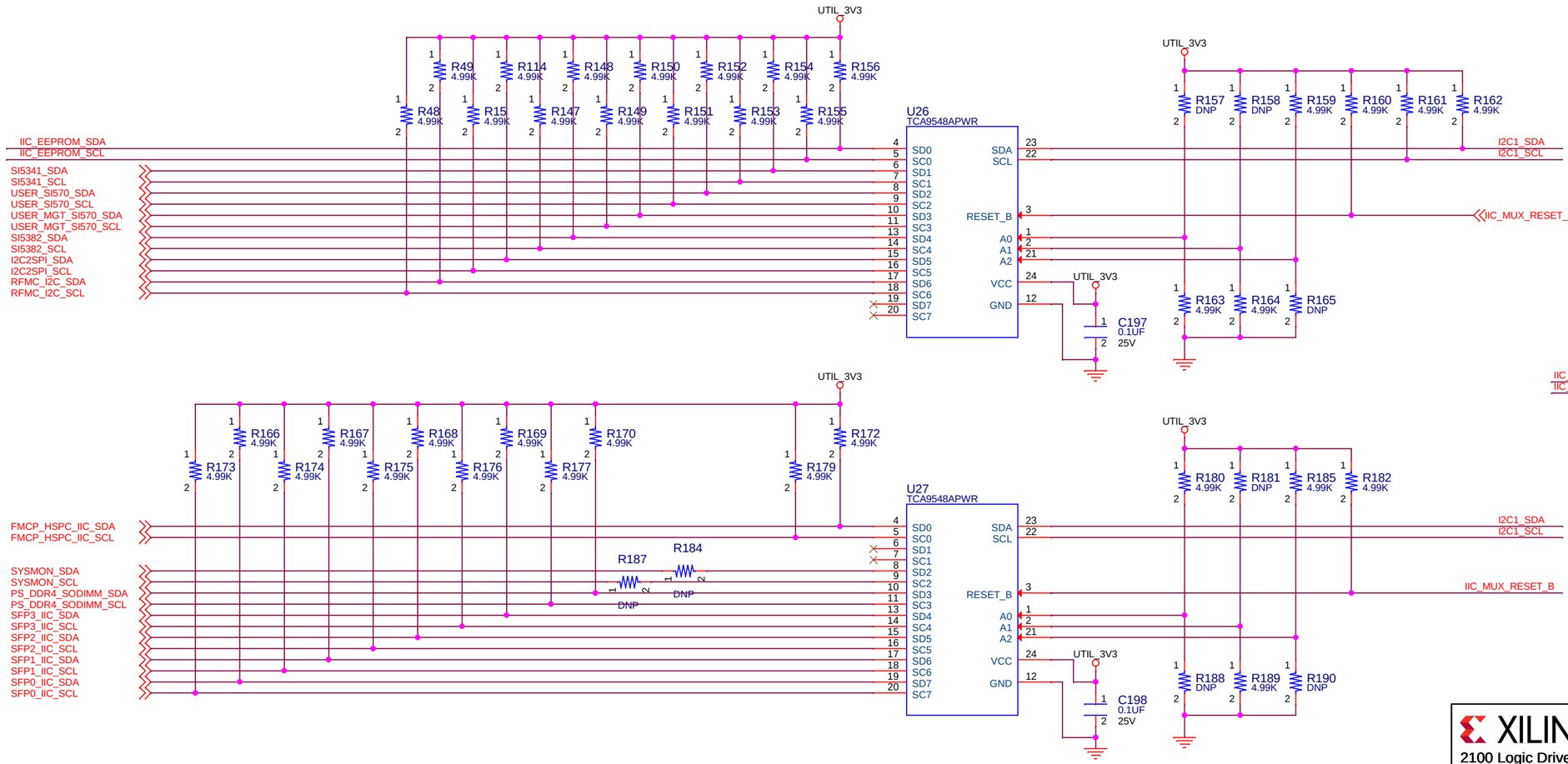

XILINX 2100 Logic Drive San Jose, CA 95124	PCB P/N : 1280976 ASSY P/N : 0432076 TEST P/N : TSS0192
Title: HW-Z1-ZCU111 027 I2C1	Ver 1.0
Size B | Date Modified: Tuesday, May 29, 2018 | Document Number: 0381811	Rev 01
Engineer: BF	Sheet 27 of 75

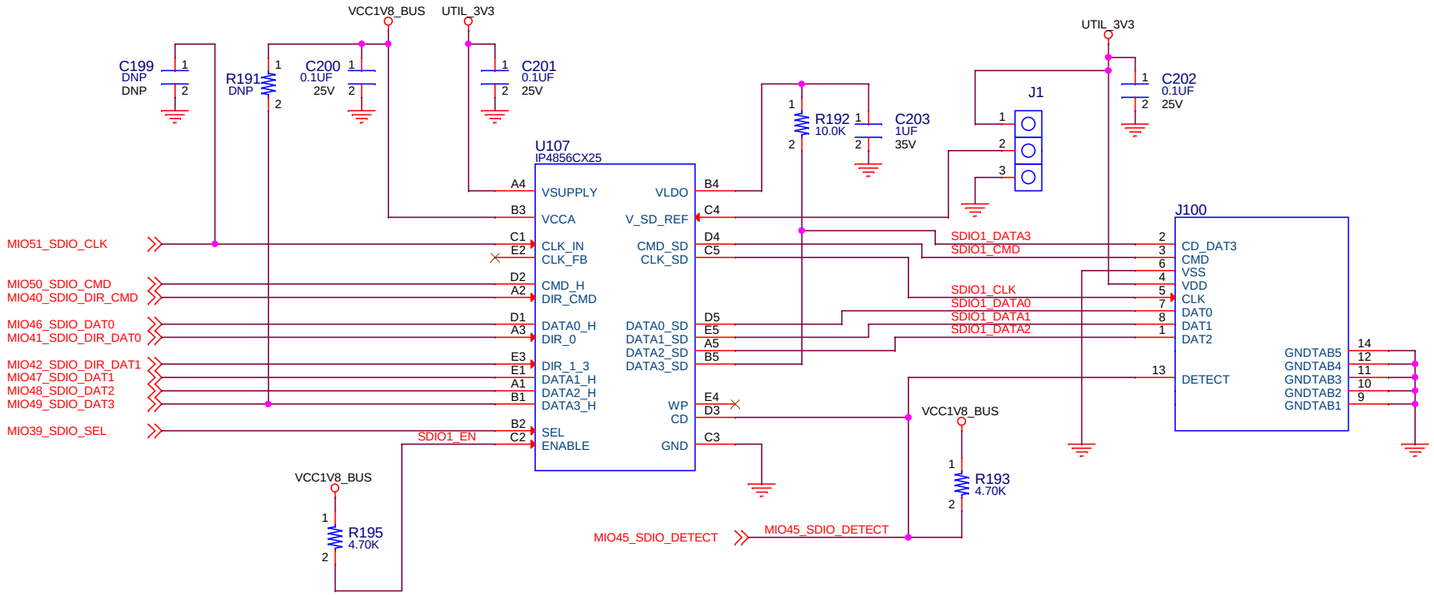

XILINX 2100 Logic Drive San Jose, CA 95124			PCB P/N : 1280976 ASSY P/N : 0432076 TEST P/N : TSS0192
Title:	HW-Z1-ZCU111 028 SD 3.0		Ver 1.0
Size B	Date Modified: Tuesday, May 29, 2018	Document Number: 0381811	Rev 01
	Engineer: BF		Sheet 28 of 75

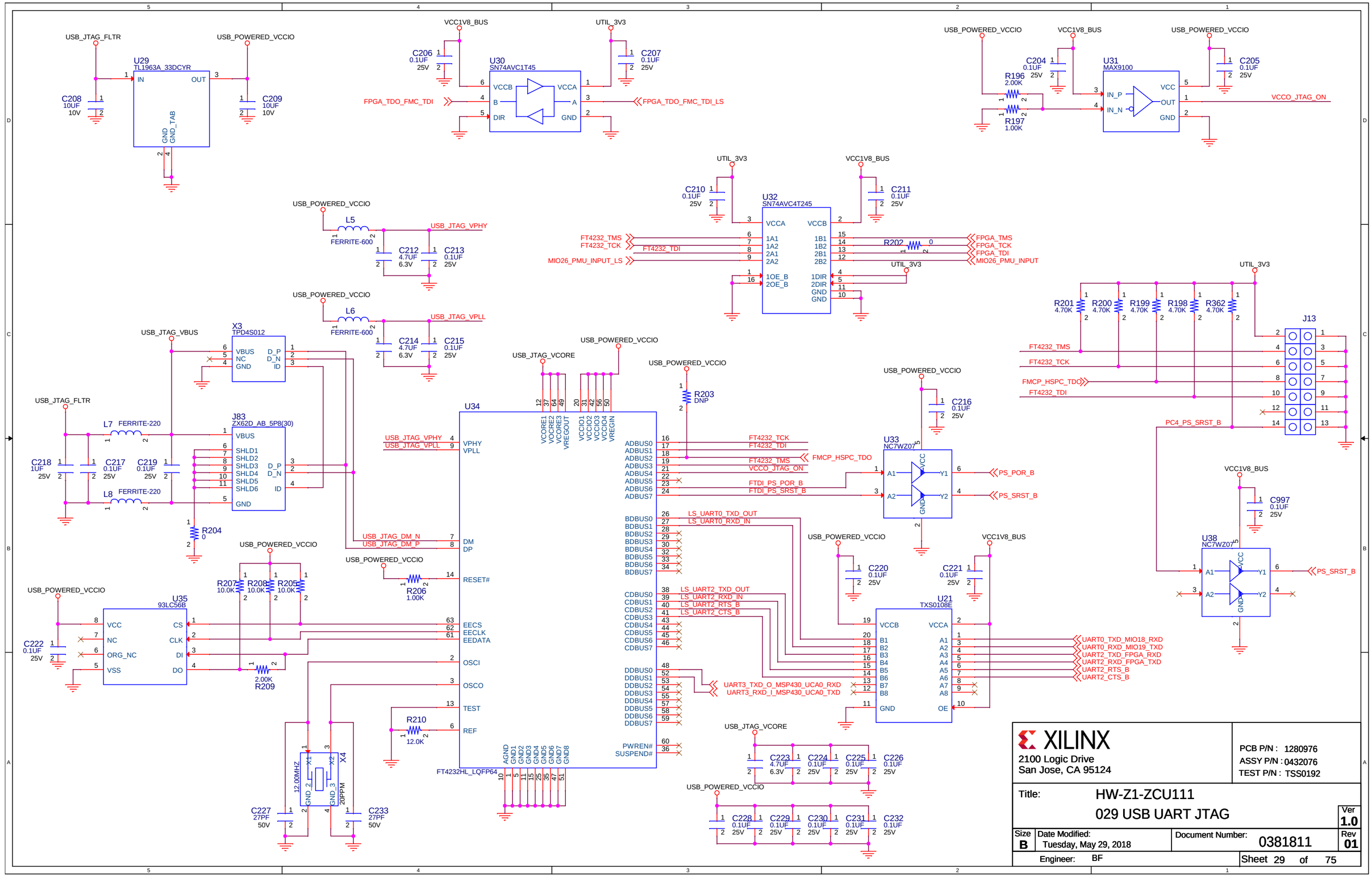
U29
TL1963A_33DCYR
IN
OUT
GND
GND_TAB
C208 10UF 10V
C209 10UF 10V
USB_JTAG_FLTR
USB_POWERED_VCCIO
U30
SN74AVC1T45
VCCB
VCCA
B
A
DIR
GND
C206 0.1UF 25V
C207 0.1UF 25V
VCC1V8_BUS
UTIL_3V3
FPGA_TDO_FMC_TDI
FPGA_TDO_FMC_TDI_LS
U31
MAX9100
IN_P
IN_N
VCC
OUT
GND
R196 2.00K
R197 1.00K
C204 0.1UF 25V
C205 0.1UF 25V
VCCO_JTAG_ON
L5
FERRITE-600
C212 4.7UF 6.3V
C213 0.1UF 25V
USB_JTAG_VPHY
L6
FERRITE-600
C214 4.7UF 6.3V
C215 0.1UF 25V
USB_JTAG_VPLL
U32
SN74AVC4T245
VCCA
VCCB
1A1
1A2
2A1
2A2
1B1
1B2
2B1
2B2
1OE_B
2OE_B
1DIR
2DIR
GND
C210 0.1UF 25V
C211 0.1UF 25V
FT4232_TMS
FT4232_TCK
FT4232_TDI
MIO26_PMU_INPUT_LS
R202 0
FPGA_TMS
FPGA_TCK
FPGA_TDI
MIO26_PMU_INPUT
R201 4.70K
R200 4.70K
R199 4.70K
R198 4.70K
R362 4.70K
J13
FMCP_HSPC_TDO
PC4_PS_SRST_B
X3
TPD4S012
VBUS
NC
GND
D_P
D_N
ID
USB_JTAG_VBUS
L7 FERRITE-220
L8 FERRITE-220
J83
ZX62D_AB_5P8(30)
SHLD1
SHLD2
SHLD3
SHLD4
SHLD5
SHLD6
C218 1UF 25V
C217 0.1UF 25V
C219 0.1UF 25V
R204 0
U34
FT4232HL_LQFP64
VPHY
VPLL
DM
DP
RESET#
EECS
EECLK
EEDATA
OSCI
OSCO
TEST
REF
PWREN#
SUSPEND#
USB_JTAG_VCORE
USB_JTAG_VPHY
USB_JTAG_VPLL
USB_JTAG_DM_N
USB_JTAG_DM_P
R203 DNP
FMCP_HSPC_TDO
FTDI_PS_POR_B
FTDI_PS_SRST_B
U33
NC7WZ07
PS_POR_B
PS_SRST_B
C216 0.1UF 25V
LS_UART0_TXD_OUT
LS_UART0_RXD_IN
LS_UART2_TXD_OUT
LS_UART2_RXD_IN
LS_UART2_RTS_B
LS_UART2_CTS_B
U21
TXS0108E
VCCB
VCCA
UART3_TXD_O_MSP430_UCA0_RXD
UART3_RXD_I_MSP430_UCA0_TXD
UART0_TXD_MIO18_RXD
UART0_RXD_MIO19_TXD
UART2_TXD_FPGA_RXD
UART2_RXD_FPGA_TXD
UART2_RTS_B
UART2_CTS_B
C220 0.1UF 25V
C221 0.1UF 25V
U35
93LC56B
CS
CLK
DI
DO
ORG_NC
VSS
C222 0.1UF 25V
R207 10.0K
R208 10.0K
R205 10.0K
R209 2.00K
R206 1.00K
R210 12.0K
X1
X2
X4
12.00MHZ
20PPM
C227 27PF 50V
C233 27PF 50V
C223 4.7UF 6.3V
C224 0.1UF 25V
C225 0.1UF 25V
C226 0.1UF 25V
C228 0.1UF 25V
C229 0.1UF 25V
C230 0.1UF 25V
C231 0.1UF 25V
C232 0.1UF 25V
C997 0.1UF 25V
U38
NC7WZ07
XILINX
2100 Logic Drive
San Jose, CA 95124
PCB P/N : 1280976
ASSY P/N : 0432076
TEST P/N : TSS0192
Title: HW-Z1-ZCU111
029 USB UART JTAG
Ver 1.0
Size B
Date Modified: Tuesday, May 29, 2018
Document Number: 0381811
Rev 01
Engineer: BF
Sheet 29 of 75

STRAP CONFIGURATION RESISTORS: SEE DP83867 DATASHEET

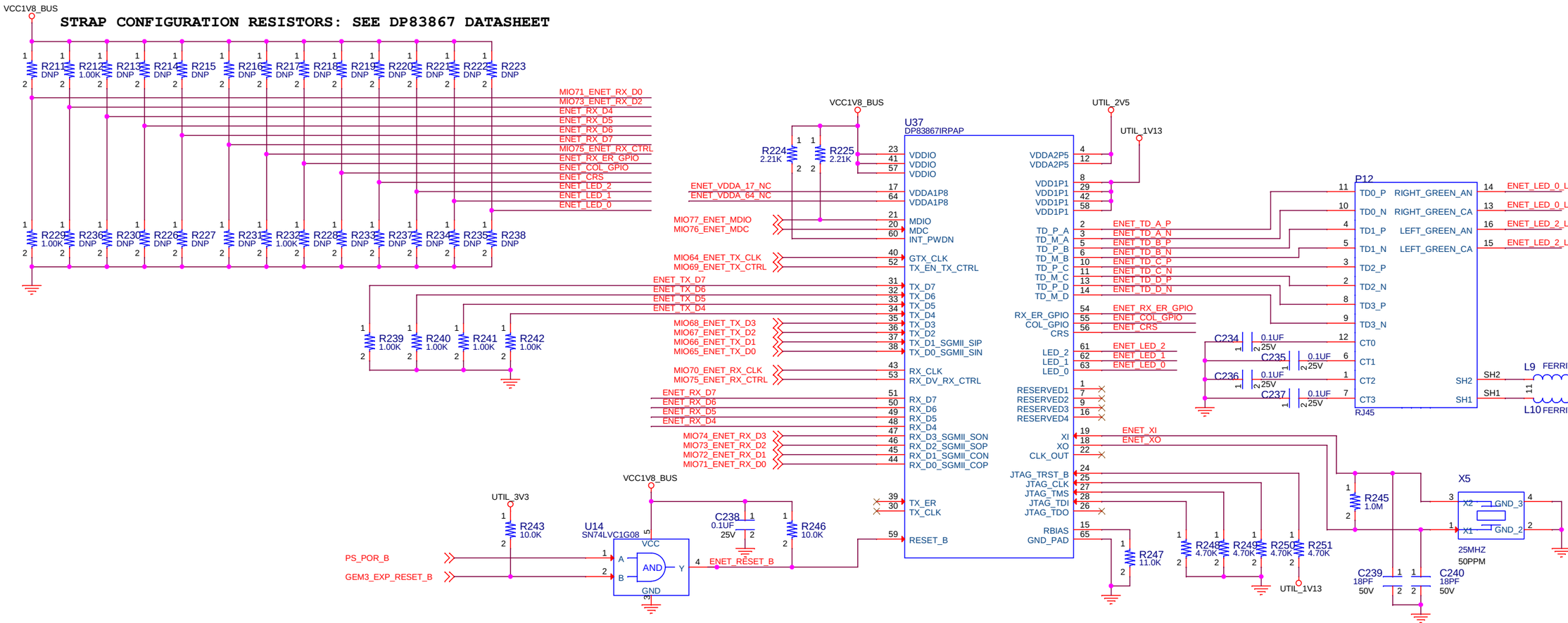

THESE CAPACITORS ARE PLACED AS CLOSE AS POSSIBLE TO THEIR RESPECTIVE DP83867 PINS

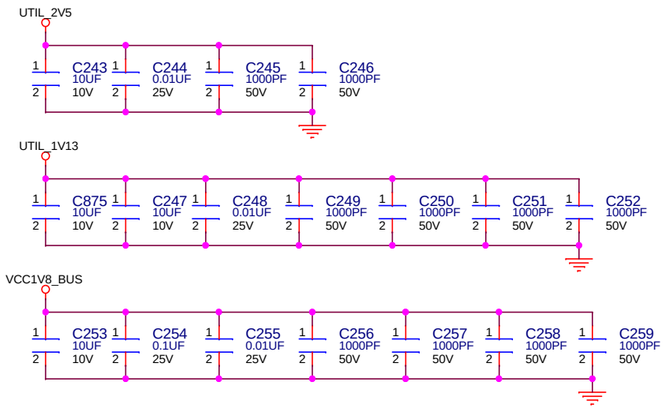

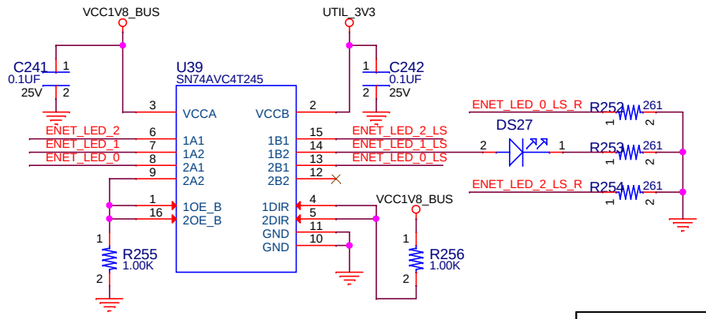

XILINX
2100 Logic Drive
San Jose, CA 95124

PCB P/N : 1280976
ASSY P/N : 0432076
TEST P/N : TSS0192

Title: HW-Z1-ZCU111
030 Ethernet RGMII

Ver 1.0

Size	Date Modified:	Document Number:	Rev
B	Tuesday, May 29, 2018	0381811	01

Engineer: BF

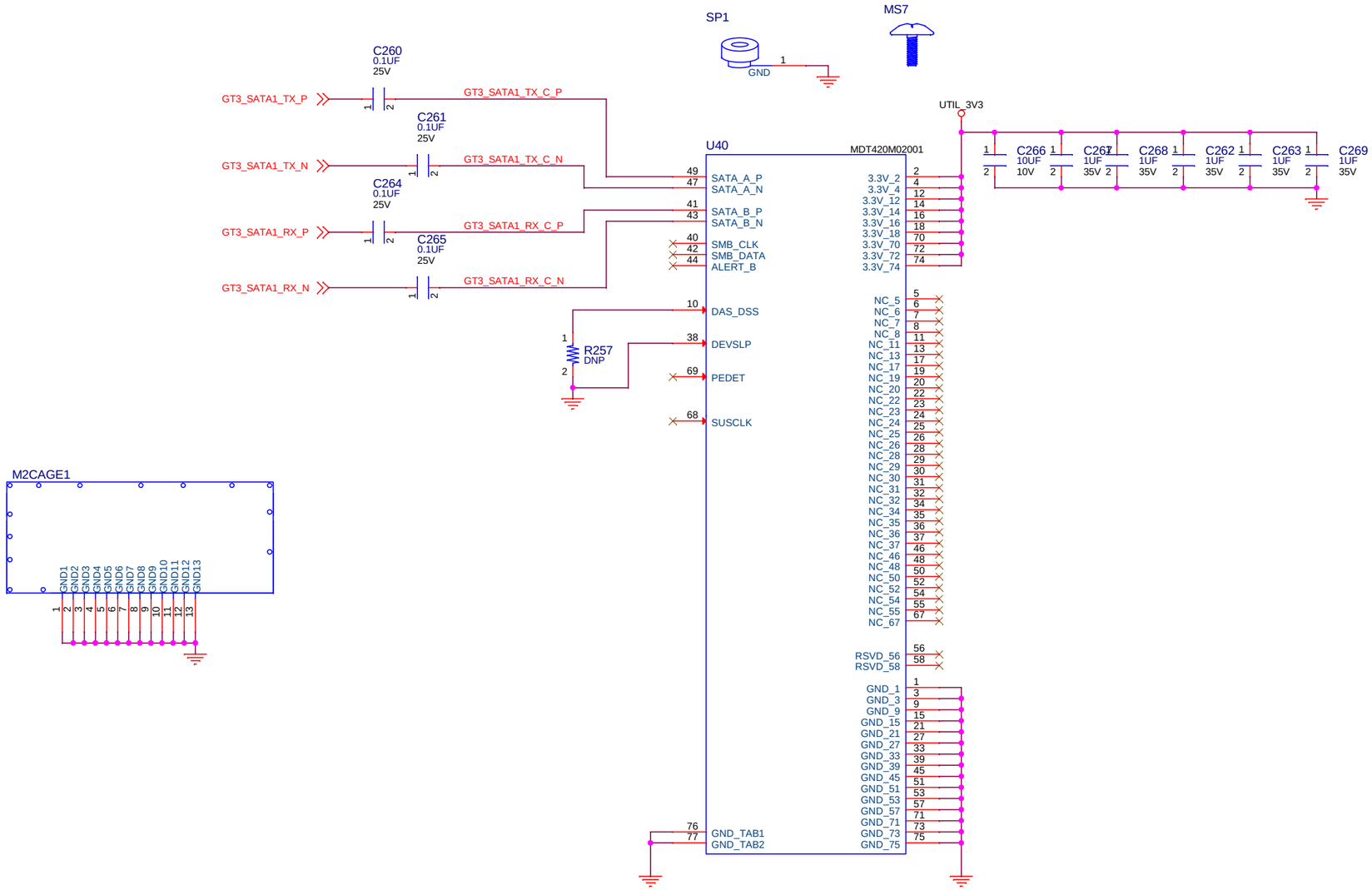

XILINX
2100 Logic Drive
San Jose, CA 95124

PCB P/N : 1280976
ASSY P/N : 0432076
TEST P/N : TSS0192

Title: HW-Z1-ZCU111
031 M.2 Connector

Ver 1.0

Size	Date Modified:	Document Number:	Rev
B	Tuesday, May 29, 2018	0381811	01

Engineer: BF

Sheet 31 of 75

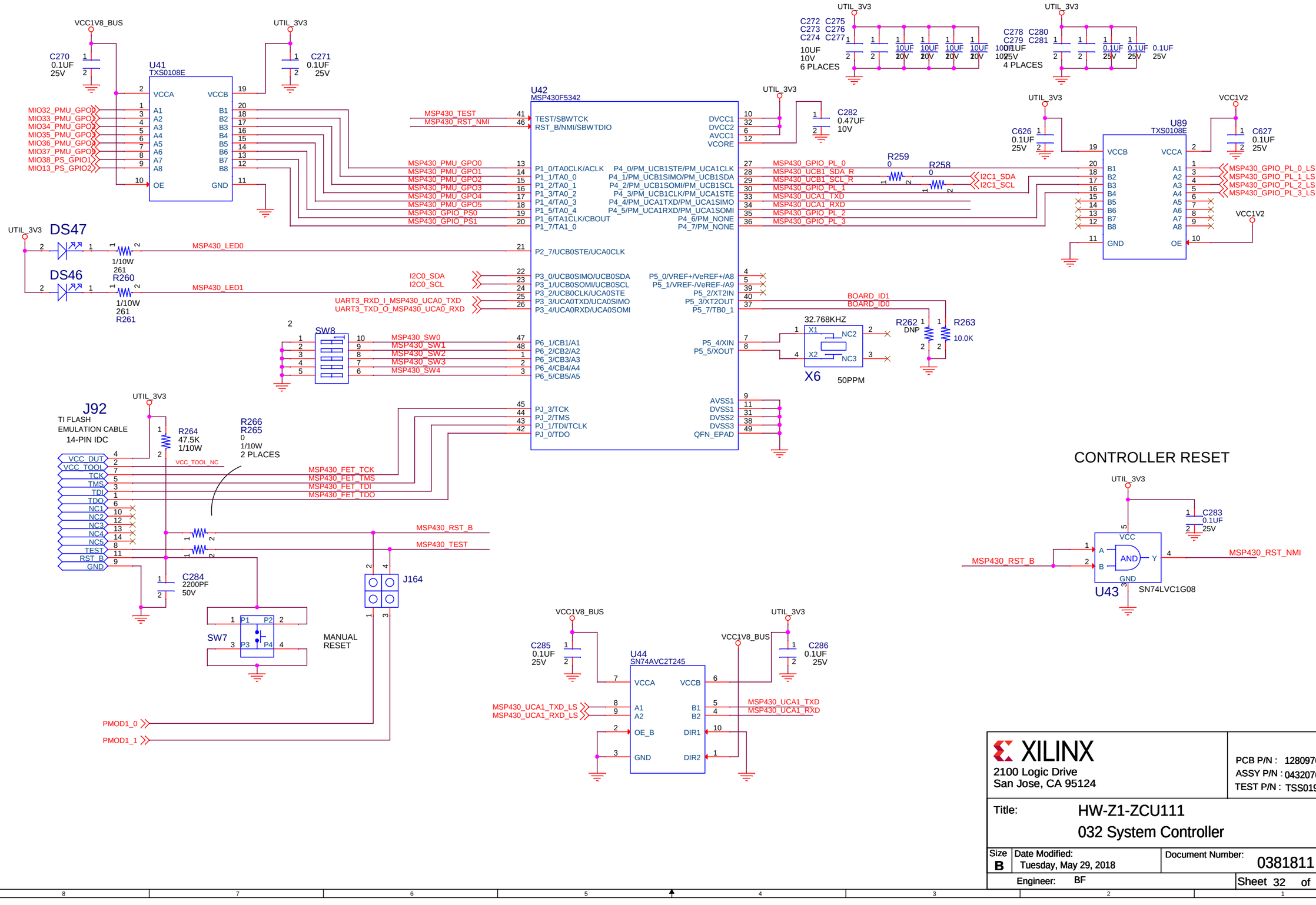

XILINX
2100 Logic Drive
San Jose, CA 95124

PCB P/N : 1280976
ASSY P/N : 0432076
TEST P/N : TSS0192

Title: HW-Z1-ZCU111
032 System Controller

Ver 1.0

Size B | Date Modified: Tuesday, May 29, 2018 | Document Number: 0381811 | Rev 01

Engineer: BF

Sheet 32 of 75



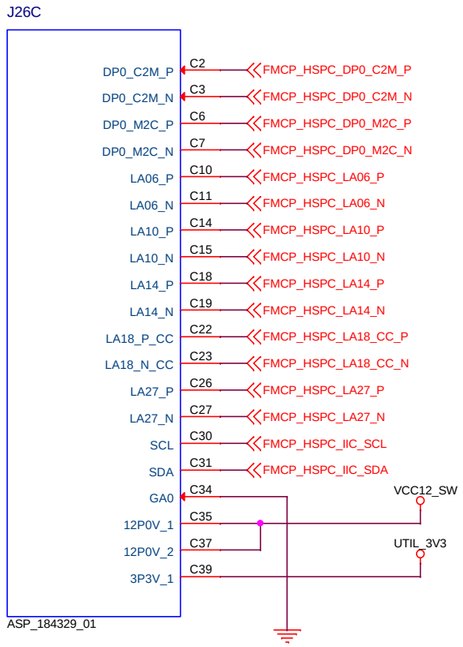

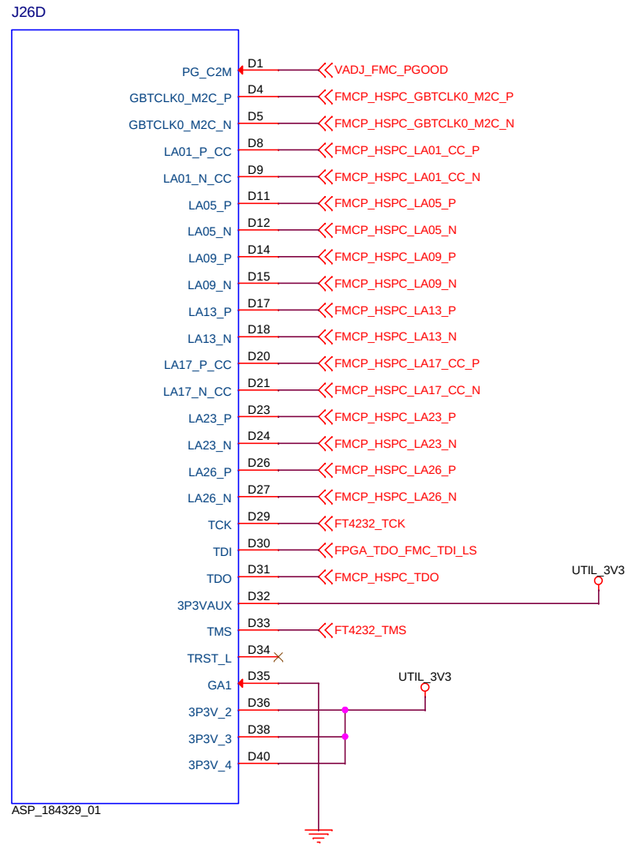

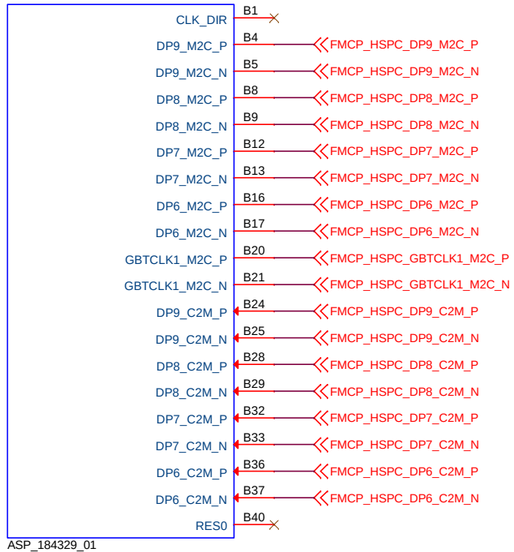

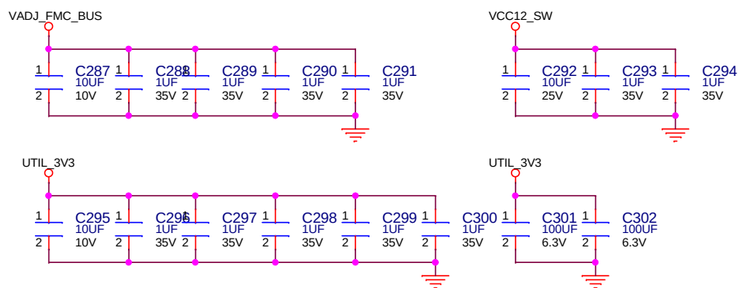

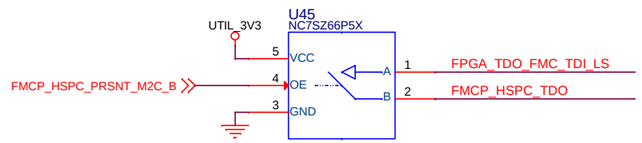

ANSI/VITA 57.4 - Draft OCT 2015

XILINX
2100 Logic Drive
San Jose, CA 95124

PCB P/N : 1280976
ASSY P/N : 0432076
TEST P/N : TSS0192

Title: HW-Z1-ZCU111
033 FMC HSPC1

Ver 1.0

Size B | Date Modified: Tuesday, May 29, 2018 | Document Number: 0381811 | Rev 01

Engineer: BF | Sheet 33 of 75

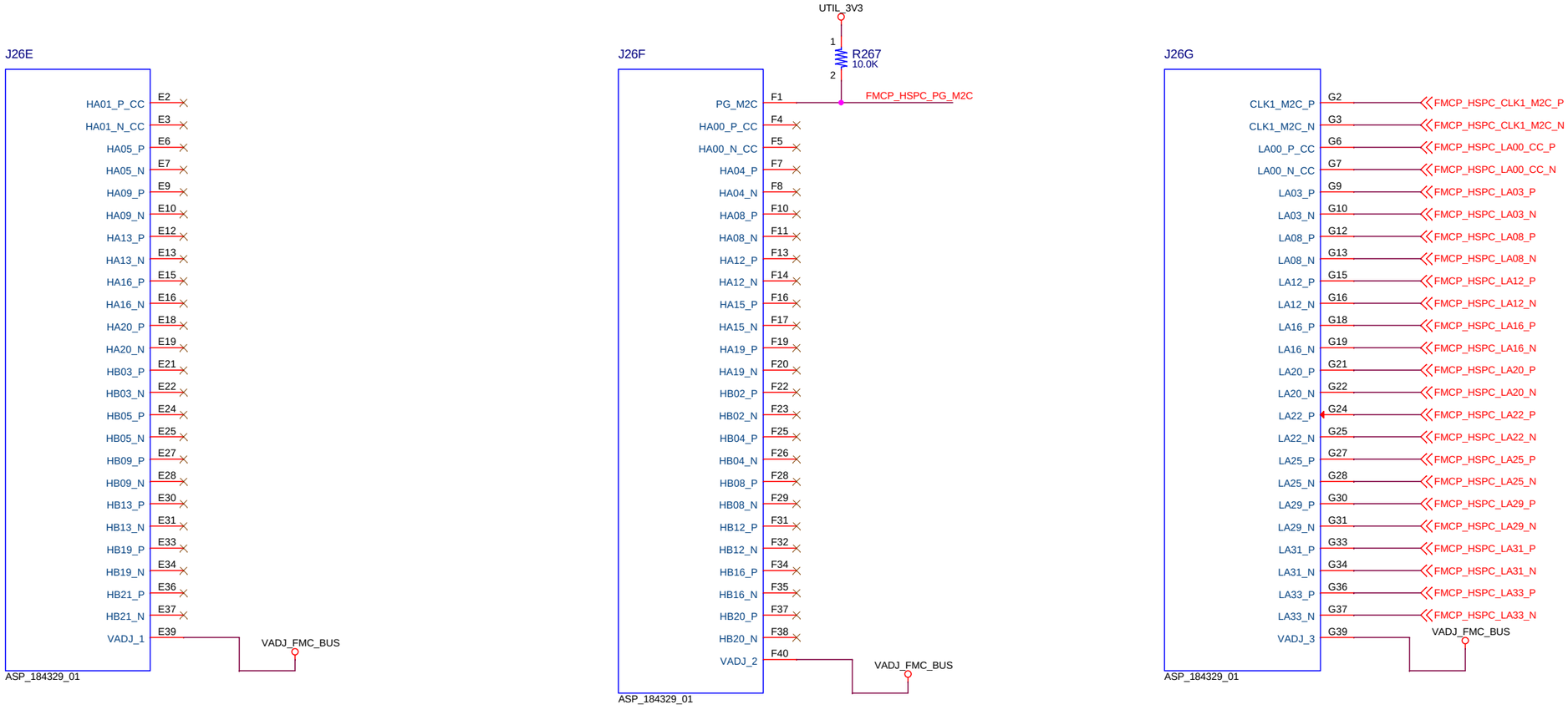

ANSI/VITA 57.4 - Draft OCT 2015

XILINX
2100 Logic Drive
San Jose, CA 95124

PCB P/N : 1280976
ASSY P/N : 0432076
TEST P/N : TSS0192

Title: HW-Z1-ZCU111
034 FMC HSPC2

Ver 1.0

Size	Date Modified:	Document Number:	Rev
B	Tuesday, May 29, 2018	0381811	01

Engineer: BF



ANSI/VITA 57.4 - Draft OCT 2015

XILINX
2100 Logic Drive
San Jose, CA 95124

PCB P/N : 1280976
ASSY P/N : 0432076
TEST P/N : TSS0192

Title: HW-Z1-ZCU111
035 FMC HSPC3

Ver 1.0

Size B | Date Modified: Tuesday, May 29, 2018 | Document Number: 0381811 | Rev 01

Engineer: BF | Sheet 35 of 75

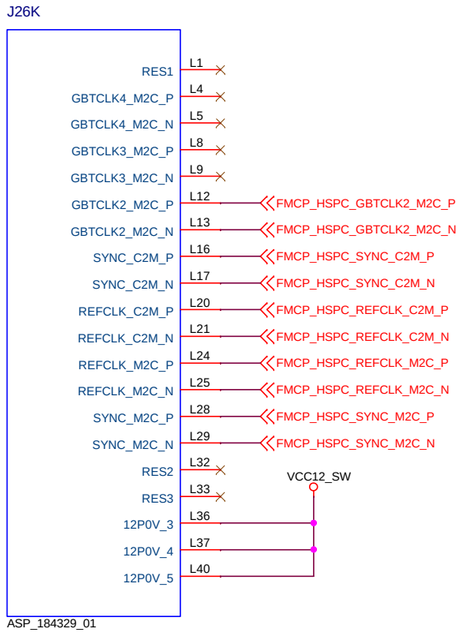

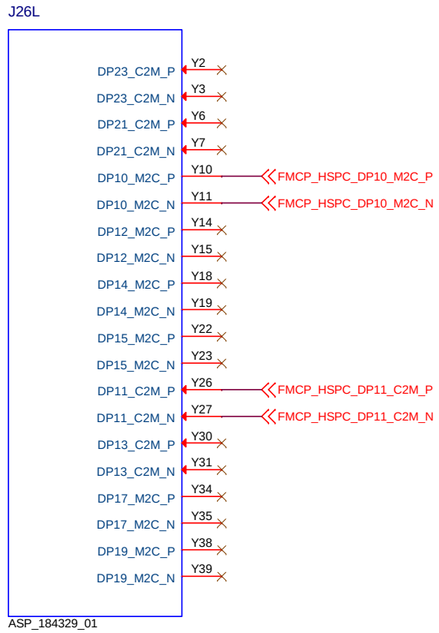

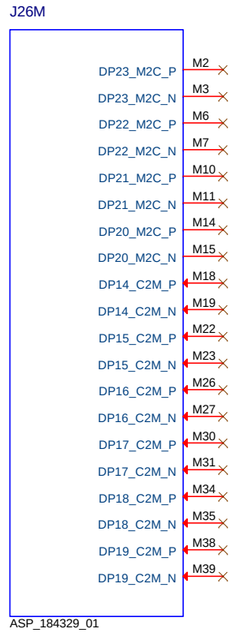

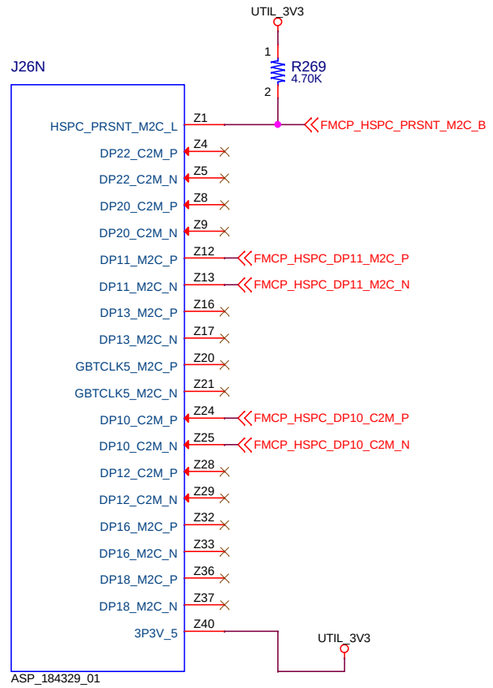

ANSI/VITA 57.4 - Draft OCT 2015

XILINX
2100 Logic Drive
San Jose, CA 95124

PCB P/N : 1280976
ASSY P/N : 0432076
TEST P/N : TSS0192

Title: HW-Z1-ZCU111
036 FMC HSPC4

Ver 1.0

Size B | Date Modified: Tuesday, May 29, 2018 | Document Number: 0381811 | Rev 01

Engineer: BF

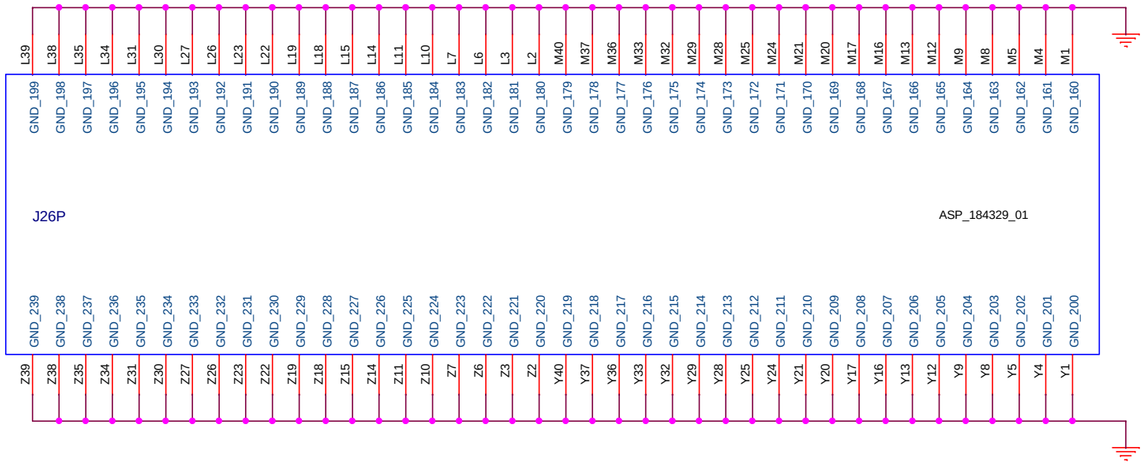

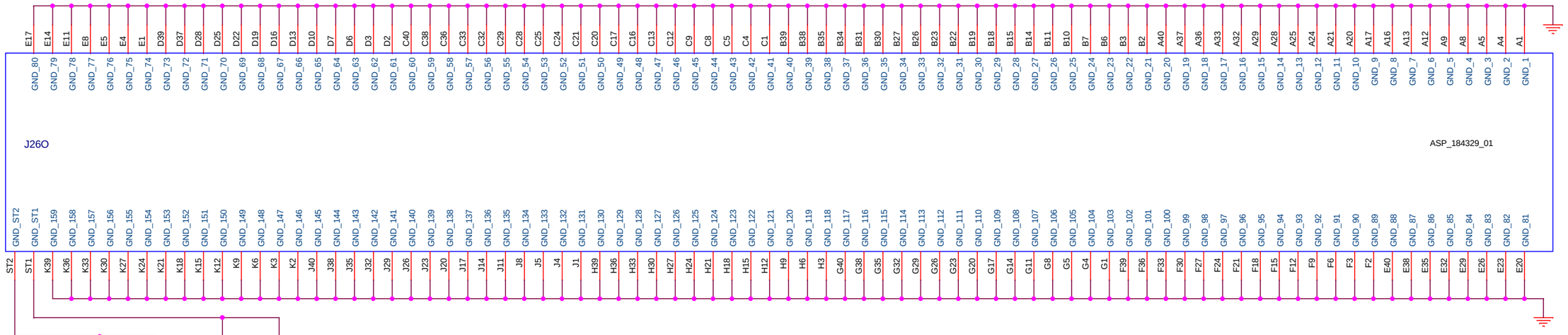

ANSI/VITA 57.4 - Draft OCT 2015

XILINX
2100 Logic Drive
San Jose, CA 95124

PCB P/N : 1280976
ASSY P/N : 0432076
TEST P/N : TSS0192

Title: HW-Z1-ZCU111
037 FMC HSPC5

Ver 1.0

Size B | Date Modified: Tuesday, May 29, 2018 | Document Number: 0381811 | Rev 01

Engineer: BF | Sheet 37 of 75

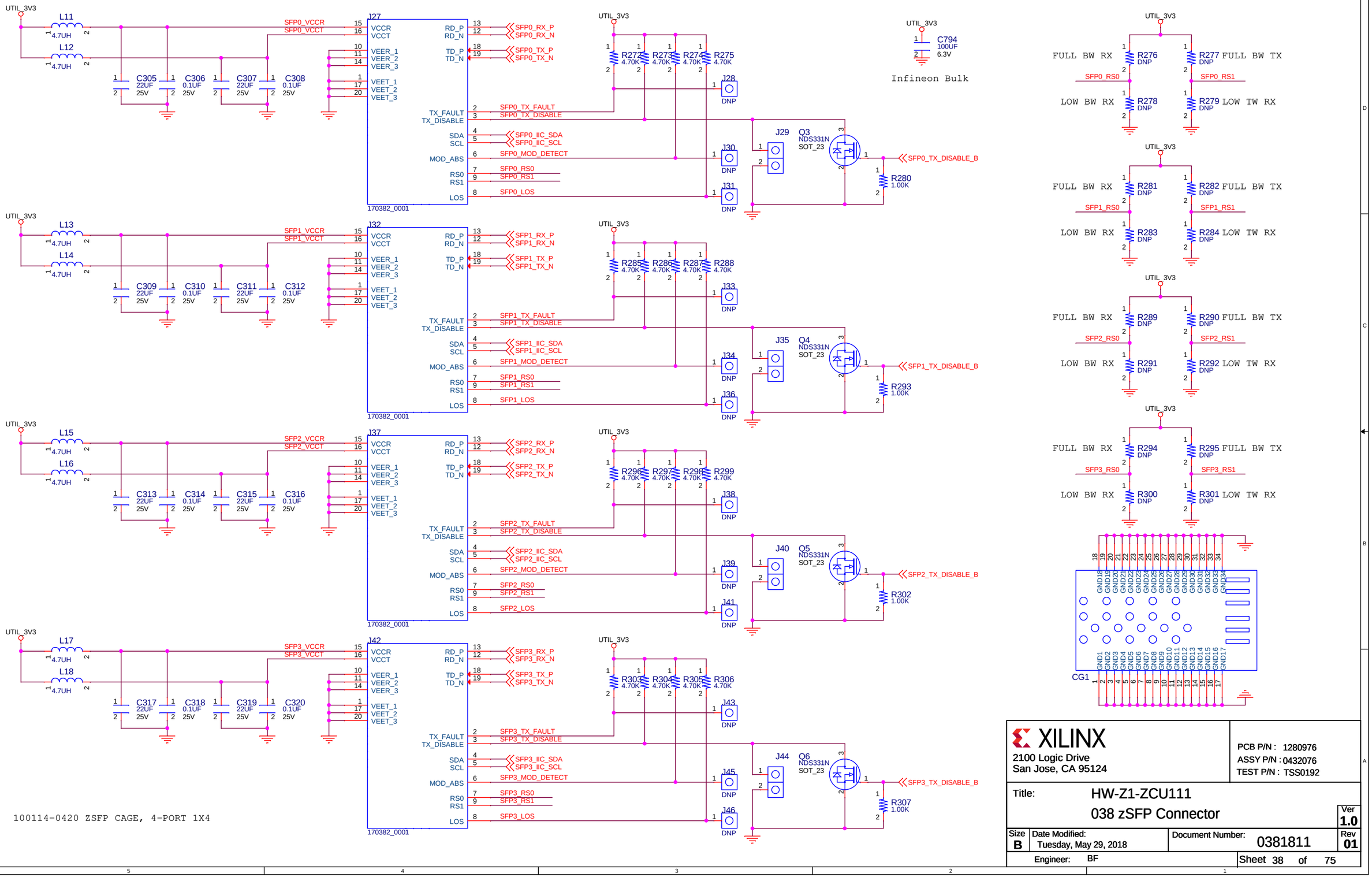

XILINX
2100 Logic Drive
San Jose, CA 95124

PCB P/N : 1280976
ASSY P/N : 0432076
TEST P/N : TSS0192

Title: HW-Z1-ZCU111
038 zSFP Connector

Ver 1.0

Size	Date Modified:	Document Number:	Rev
B	Tuesday, May 29, 2018	0381811	01

Engineer: BF

Sheet 38 of 75

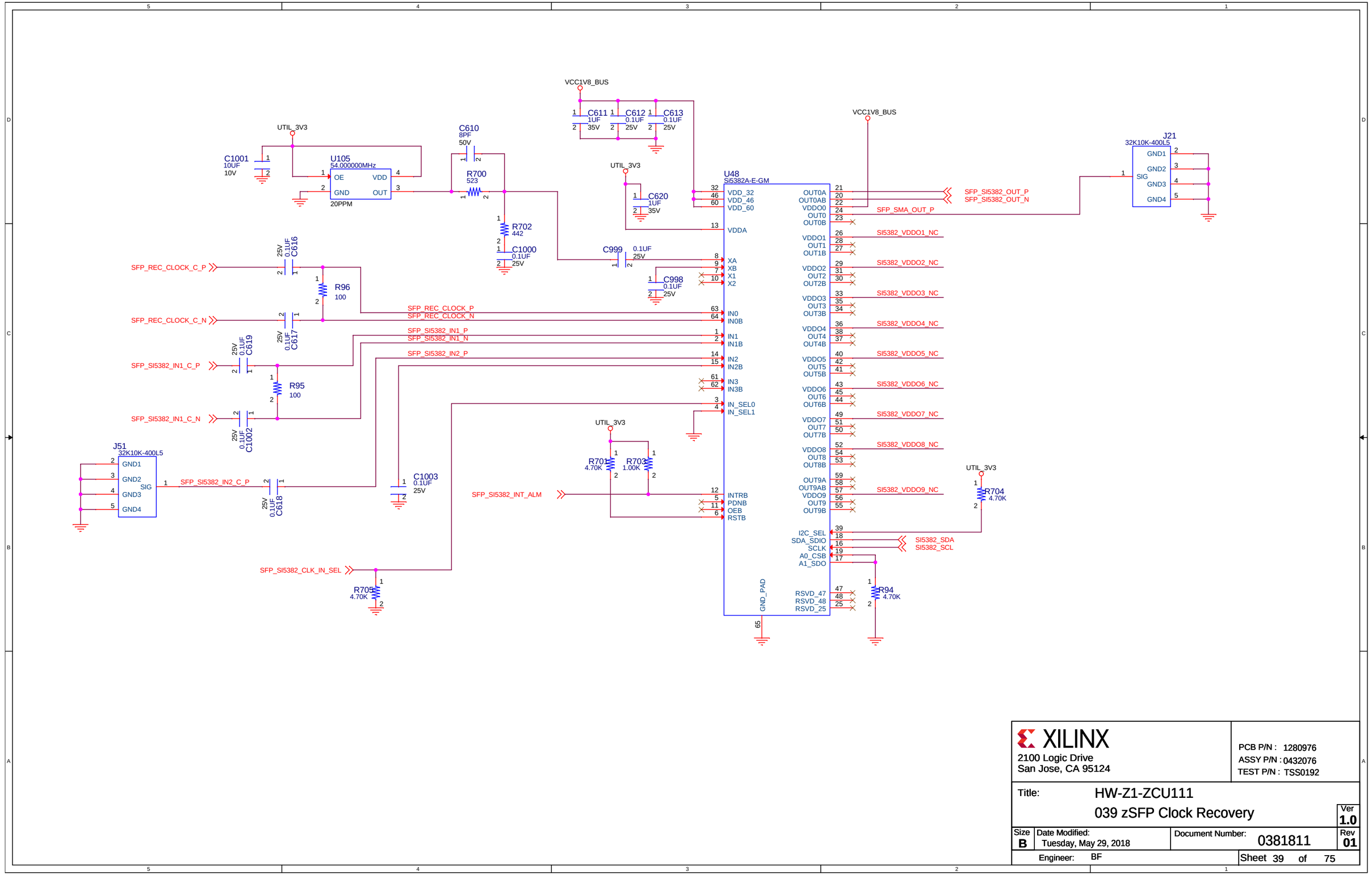

XILINX
2100 Logic Drive
San Jose, CA 95124

PCB P/N : 1280976
ASSY P/N : 0432076
TEST P/N : TSS0192

Title: HW-Z1-ZCU111
039 zSFP Clock Recovery

Ver 1.0

Size B | Date Modified: Tuesday, May 29, 2018 | Document Number: 0381811 | Rev 01

Engineer: BF | Sheet 39 of 75

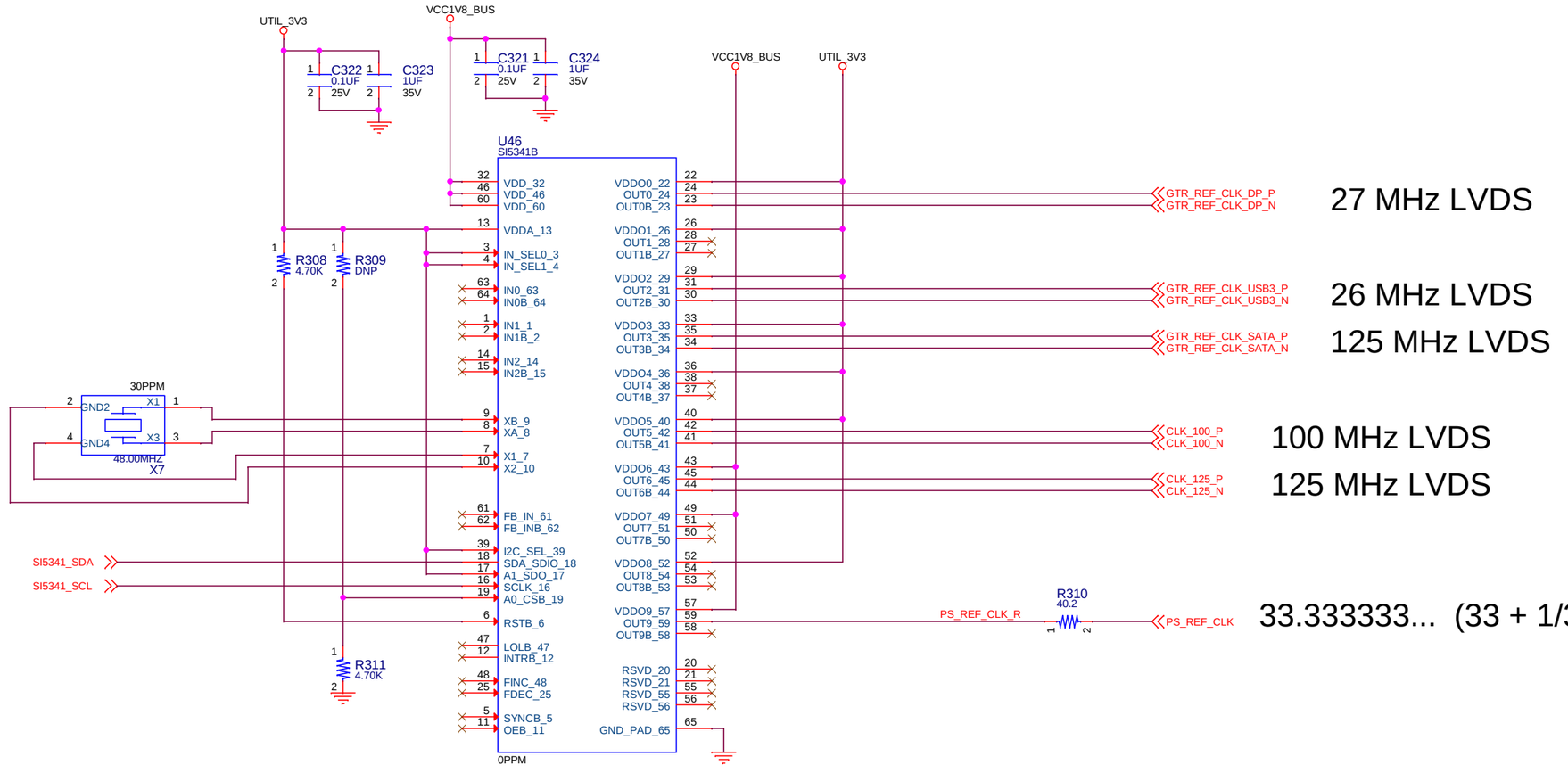

XILINX
2100 Logic Drive
San Jose, CA 95124

PCB P/N : 1280976
ASSY P/N : 0432076
TEST P/N : TSS0192

Title: HW-Z1-ZCU111
040 Fixed Clocks

Ver 1.0

Size	Date Modified:	Document Number:	Rev
B	Tuesday, May 29, 2018	0381811	01

Engineer: BF

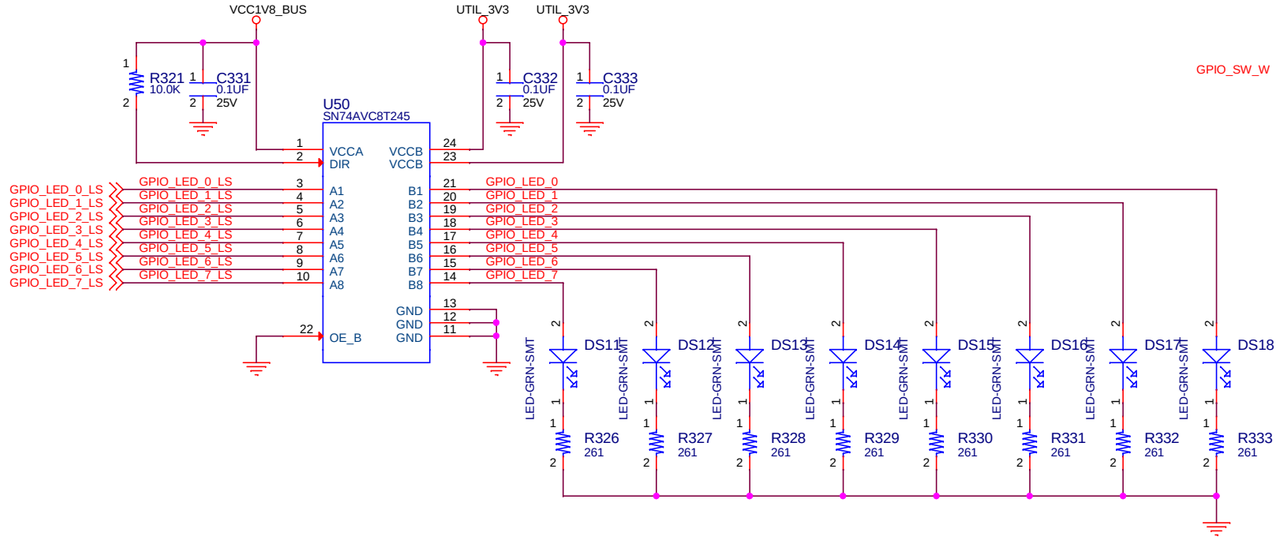

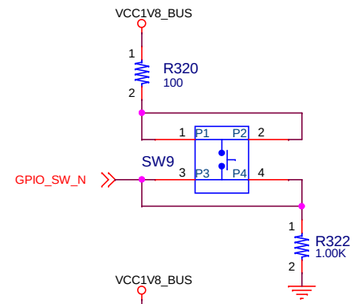

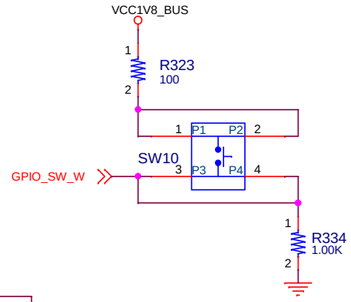

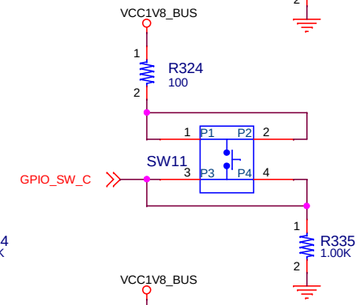

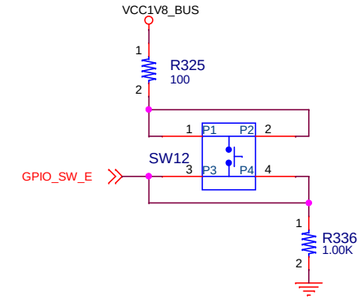

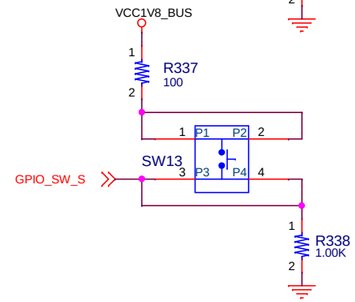

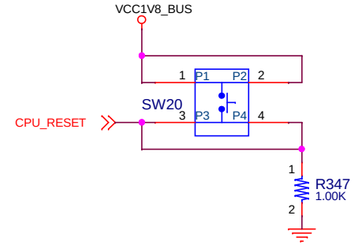

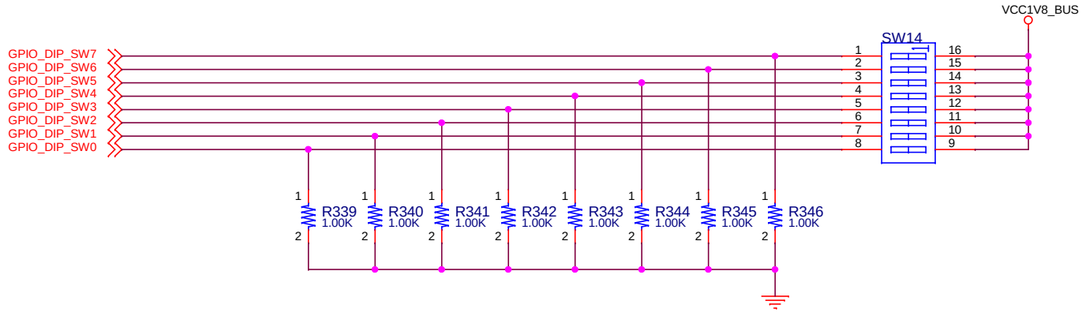

XILINX
2100 Logic Drive
San Jose, CA 95124

PCB P/N : 1280976
ASSY P/N : 0432076
TEST P/N : TSS0192

Title: HW-Z1-ZCU111
041 GPIO LEDs Switches Buttons

Ver 1.0

Size B | Date Modified: Tuesday, May 29, 2018 | Document Number: 0381811 | Rev 01

Engineer: BF | Sheet 41 of 75

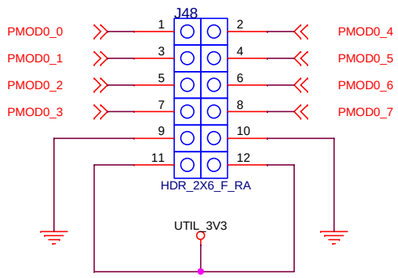

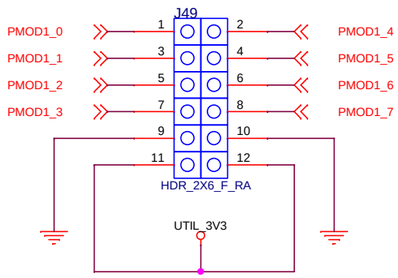

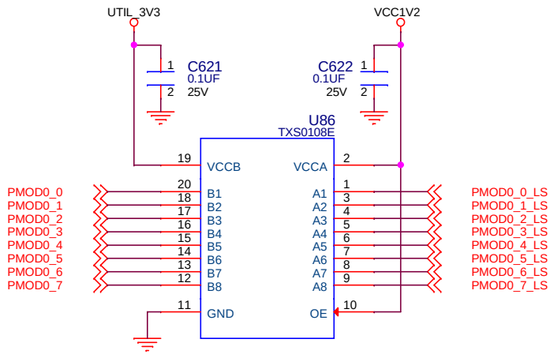

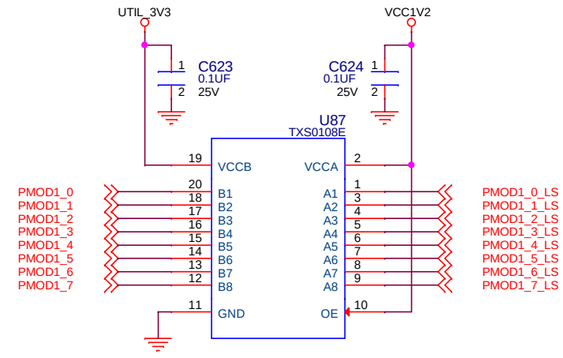

XILINX
2100 Logic Drive
San Jose, CA 95124

PCB P/N : 1280976
ASSY P/N : 0432076
TEST P/N : TSS0192

Title: HW-Z1-ZCU111
042 PMOD Connectors

Ver 1.0

Size	Date Modified:	Document Number:	Rev
B	Tuesday, May 29, 2018	0381811	01

Engineer: BF

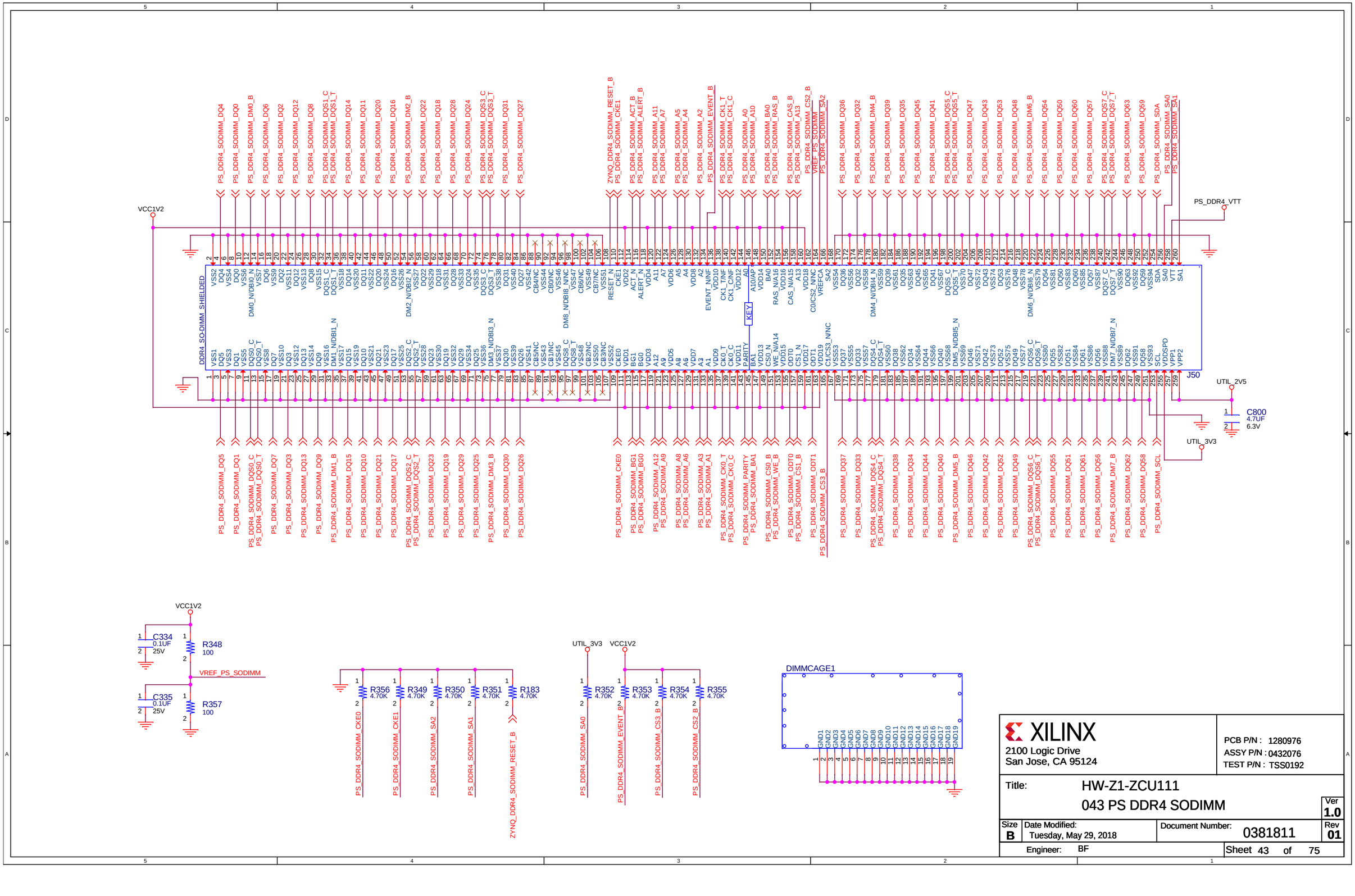
DDR4_SO-DIMM_SHIELDED
J50
KEY
VCC1V2
PS_DDR4_VTT
UTIL_2V5
UTIL_3V3
C800
4.7UF
6.3V
C334
0.1UF
25V
C335
0.1UF
25V
R348
100
R357
100
VREF_PS_SODIMM
R356
R349
R350
R351
R183
R352
R353
R354
R355
4.70K
DIMMCAGE1
XILINX
2100 Logic Drive
San Jose, CA 95124
PCB P/N : 1280976
ASSY P/N : 0432076
TEST P/N : TSS0192
Title: HW-Z1-ZCU111
043 PS DDR4 SODIMM
Ver 1.0
Size B
Date Modified: Tuesday, May 29, 2018
Document Number: 0381811
Rev 01
Engineer: BF
Sheet 43 of 75

PS SODIMM DECOUPLING

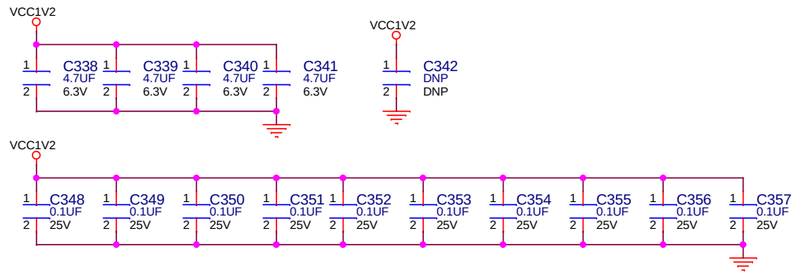

XILINX
2100 Logic Drive
San Jose, CA 95124

PCB P/N : 1280976
ASSY P/N : 0432076
TEST P/N : TSS0192

Title: HW-Z1-ZCU111
044 SODIMM Decoupling

Ver 1.0

Size B | Date Modified: Tuesday, May 29, 2018 | Document Number: 0381811 | Rev 01

Engineer: BF | Sheet 44 of 75

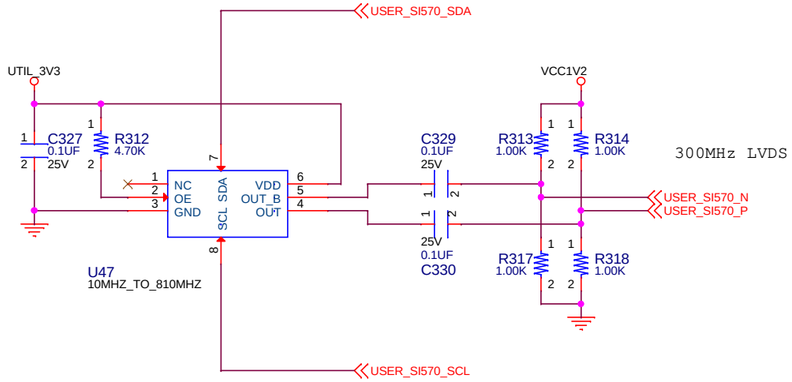

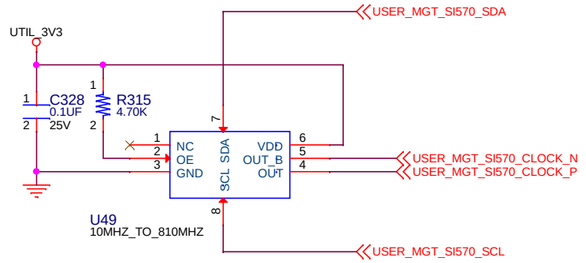

XILINX
2100 Logic Drive
San Jose, CA 95124

PCB P/N : 1280976
ASSY P/N : 0432076
TEST P/N : TSS0192

Title: HW-Z1-ZCU111
045 PL Programmable Clocks

Ver 1.0

Size B | Date Modified: Tuesday, May 29, 2018 | Document Number: 0381811 | Rev 01

Engineer: BF | Sheet 45 of 75

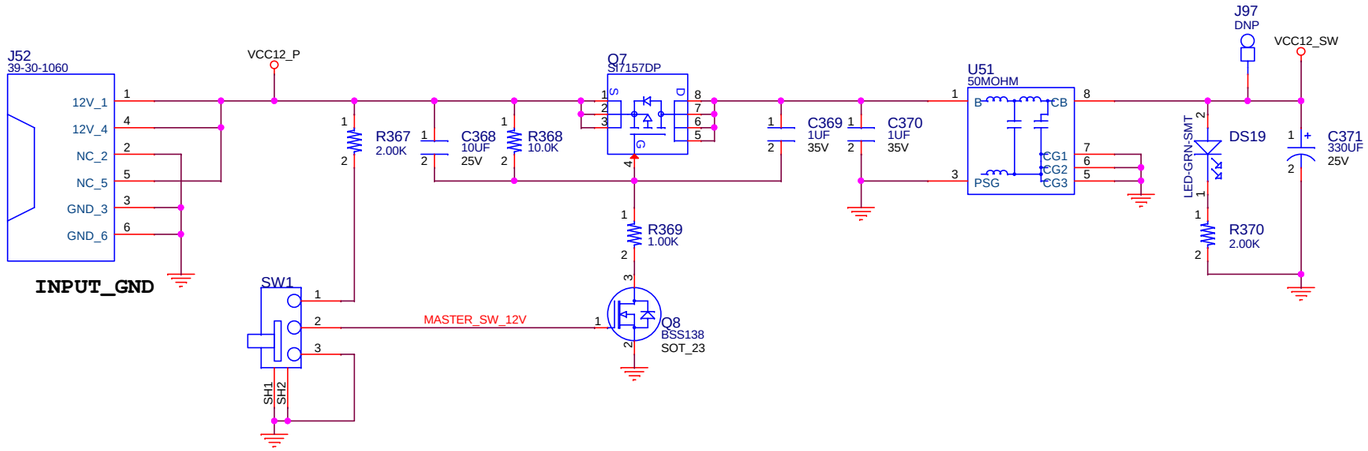

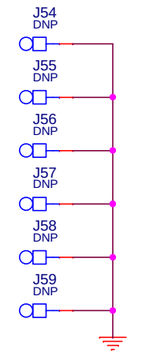

XILINX
2100 Logic Drive
San Jose, CA 95124

PCB P/N : 1280976
ASSY P/N : 0432076
TEST P/N : TSS0192

Title: HW-Z1-ZCU111
046 Power Input Fan Controller

Ver 1.0

Size B | Date Modified: Tuesday, May 29, 2018 | Document Number: 0381811 | Rev 01

Engineer: BF | Sheet 46 of 75

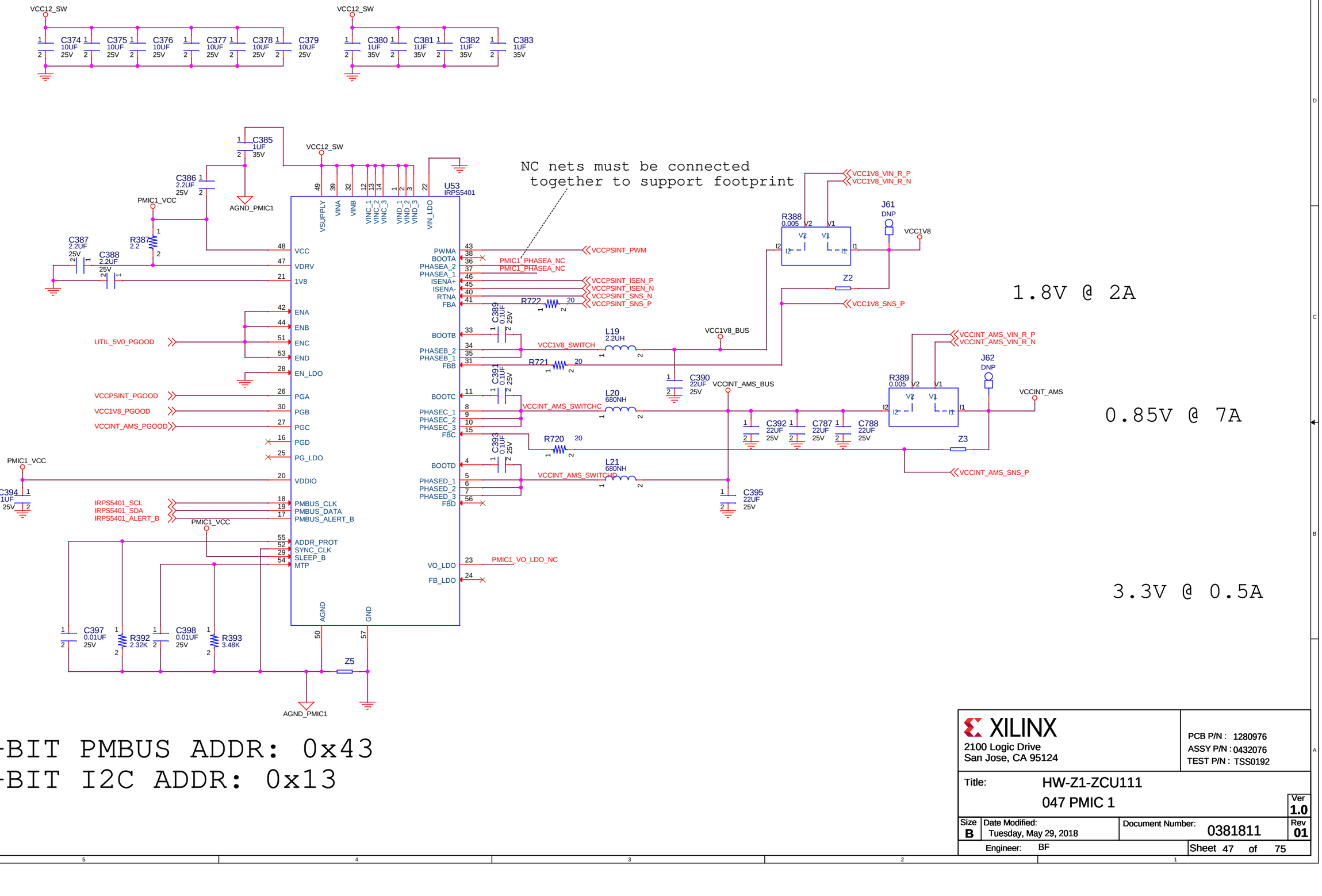

XILINX
2100 Logic Drive
San Jose, CA 95124

PCB P/N : 1280976
ASSY P/N : 0432076
TEST P/N : TSS0192

Title: HW-Z1-ZCU111
047 PMIC 1

Ver 1.0

Size B | Date Modified: Tuesday, May 29, 2018 | Document Number: 0381811 | Rev 01

Engineer: BF | Sheet 47 of 75

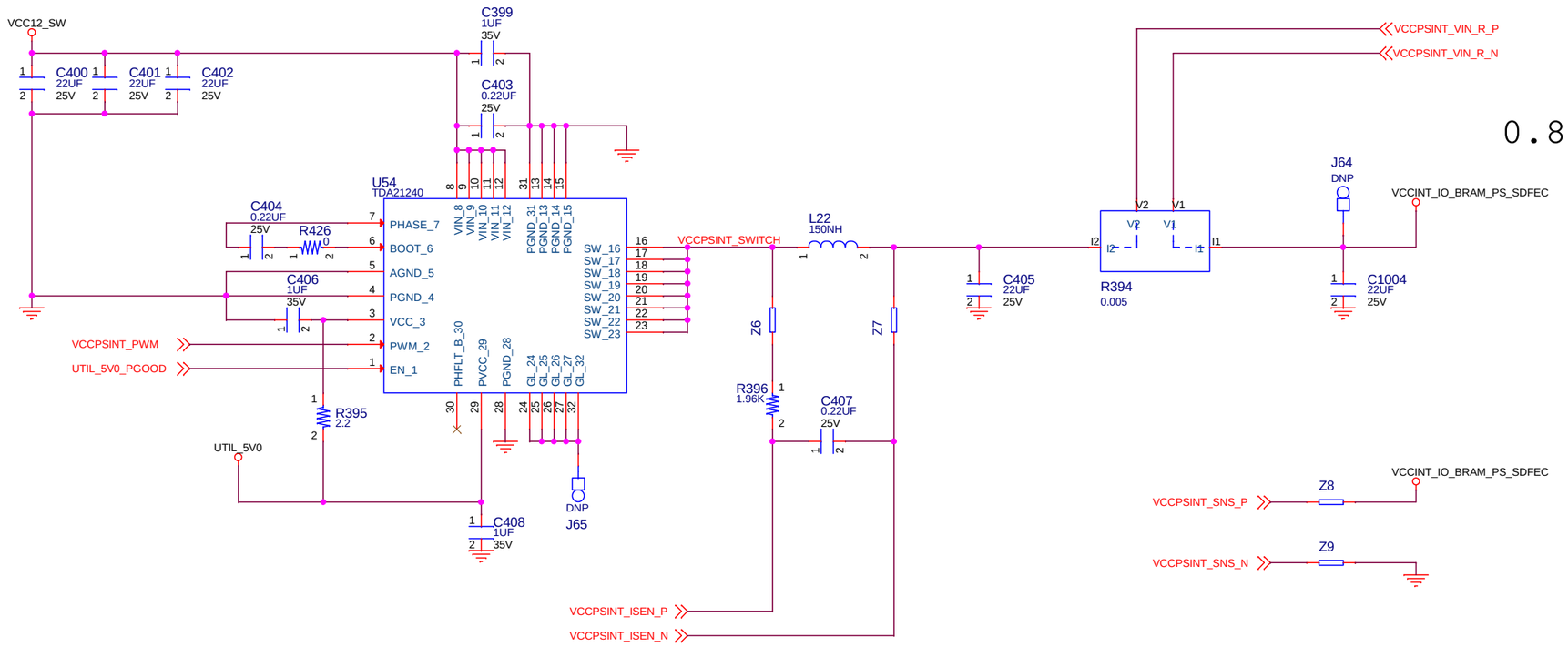

XILINX
2100 Logic Drive
San Jose, CA 95124

PCB P/N : 1280976
ASSY P/N : 0432076
TEST P/N : TSS0192

Title: HW-Z1-ZCU111
048 PMIC 1 Power Stage

Ver 1.0

Size	Date Modified:	Document Number:	Rev
B	Tuesday, May 29, 2018	0381811	01

Engineer: BF

Sheet 48 of 75

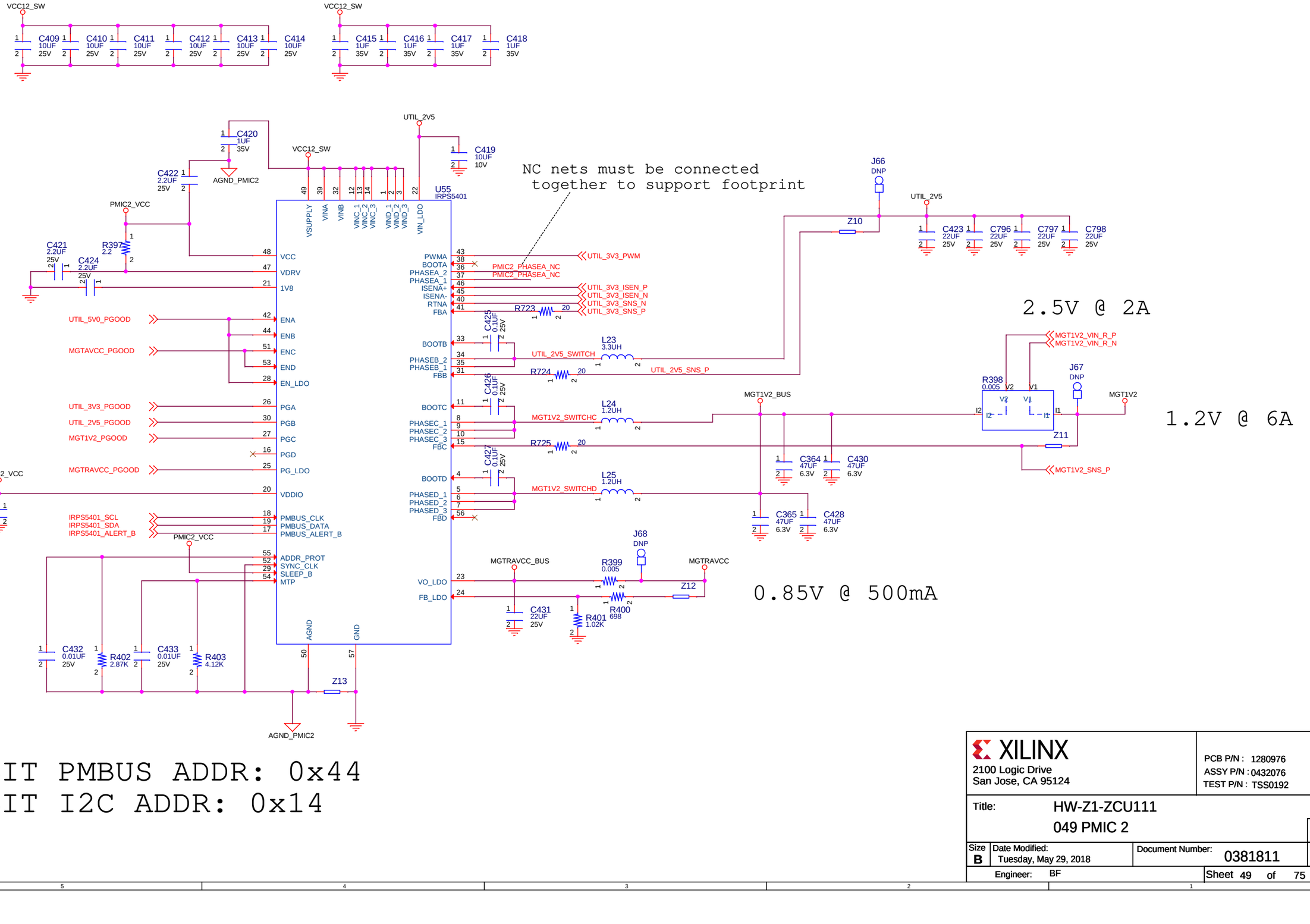

XILINX
2100 Logic Drive
San Jose, CA 95124

PCB P/N : 1280976
ASSY P/N : 0432076
TEST P/N : TSS0192

Title: HW-Z1-ZCU111
049 PMIC 2

Ver 1.0

Size B | Date Modified: Tuesday, May 29, 2018 | Document Number: 0381811 | Rev 01

Engineer: BF | Sheet 49 of 75

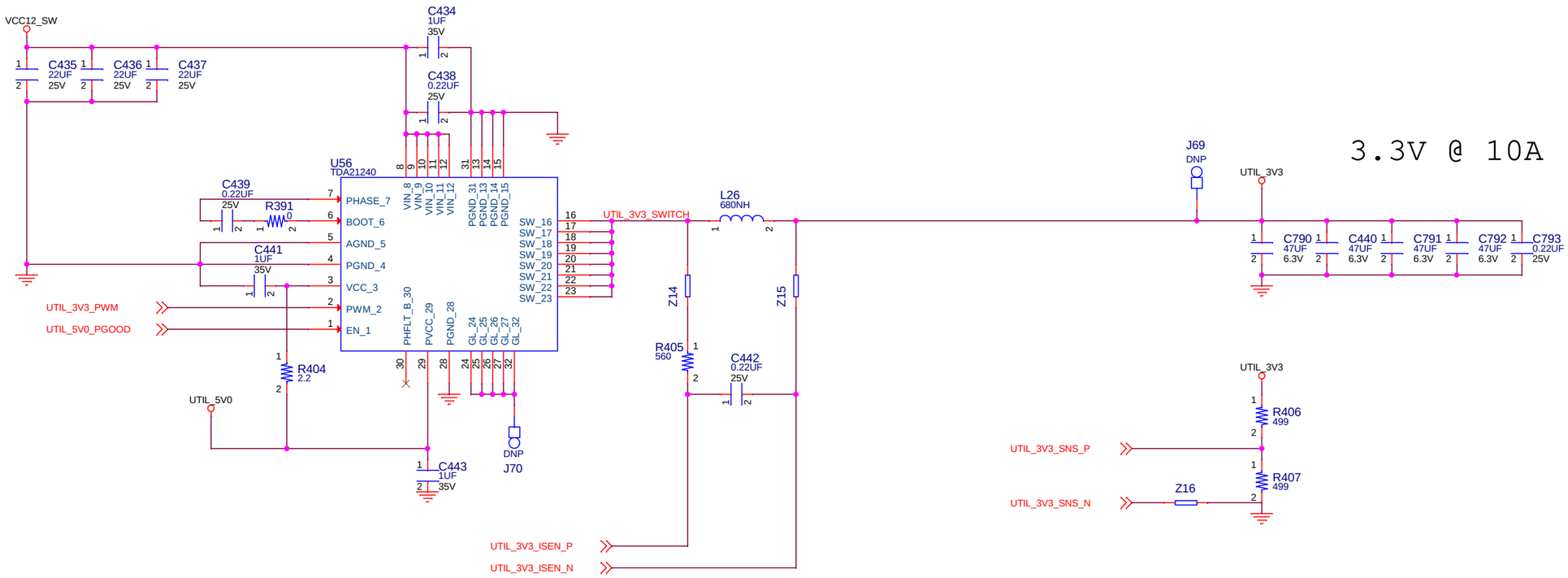

XILINX
2100 Logic Drive
San Jose, CA 95124

PCB P/N : 1280976
ASSY P/N : 0432076
TEST P/N : TSS0192

Title: HW-Z1-ZCU111
050 PMIC 2 Power Stage

Ver 1.0

Size	Date Modified:	Document Number:	Rev
B	Tuesday, May 29, 2018	0381811	01

Engineer: BF

Sheet 50 of 75

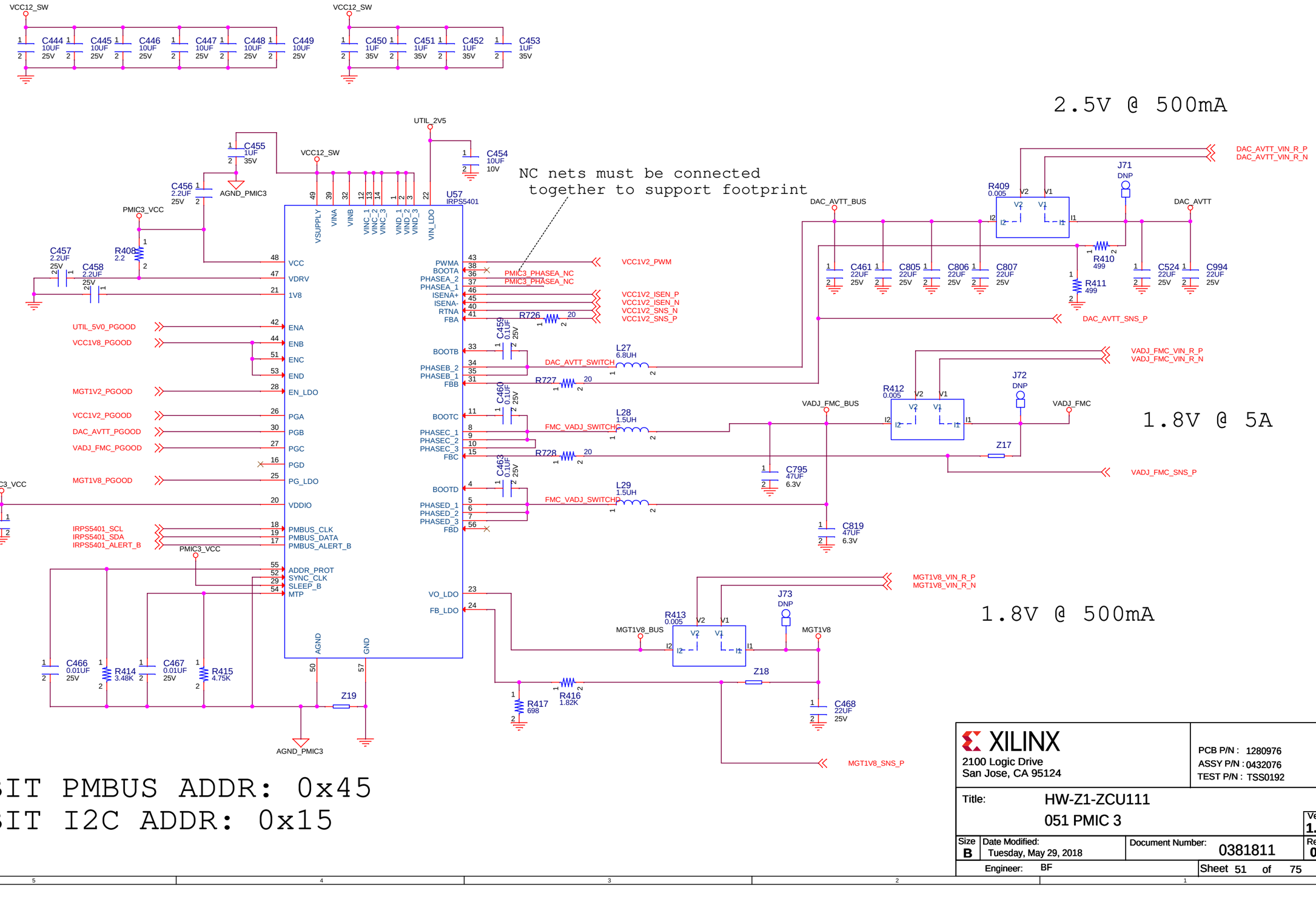
VCC12_SW
C444 10UF 25V
C445 10UF 25V
C446 10UF 25V
C447 10UF 25V
C448 10UF 25V
C449 10UF 25V
VCC12_SW
C450 1UF 35V
C451 1UF 35V
C452 1UF 35V
C453 1UF 35V
2.5V @ 500mA
UTIL_2V5
C455 1UF 35V
C454 10UF 10V
VCC12_SW
C456 2.2UF 25V
AGND_PMIC3
NC nets must be connected together to support footprint
U57 IRPS5401
PMIC3_VCC
C457 2.2UF 25V
C458 2.2UF 25V
R408 2.2
VSUPPLY
VINA
VINB
VINC_1
VINC_2
VINC_3
VIND_1
VIND_2
VIND_3
VIN_LDO
VCC
VDRV
1V8
ENA
ENB
ENC
END
EN_LDO
PGA
PGB
PGC
PGD
PG_LDO
VDDIO
PMBUS_CLK
PMBUS_DATA
PMBUS_ALERT_B
ADDR_PROT
SYNC_CLK
SLEEP_B
MTP
AGND
GND
UTIL_5V0_PGOOD
VCC1V8_PGOOD
MGT1V2_PGOOD
VCC1V2_PGOOD
DAC_AVTT_PGOOD
VADJ_FMC_PGOOD
MGT1V8_PGOOD
IRPS5401_SCL
IRPS5401_SDA
IRPS5401_ALERT_B
PMIC3_VCC
C464 0.1UF 25V
PMIC3_VCC
C466 0.01UF 25V
R414 3.48K
C467 0.01UF 25V
R415 4.75K
Z19
AGND_PMIC3
PWMA
BOOTA
PHASEA_2
PHASEA_1
ISENA+
ISENA-
RTNA
FBA
BOOTB
PHASEB_2
PHASEB_1
FBB
BOOTC
PHASEC_1
PHASEC_2
PHASEC_3
FBC
BOOTD
PHASED_1
PHASED_2
PHASED_3
FBD
VO_LDO
FB_LDO
VCC1V2_PWM
PMIC3_PHASEA_NC
PMIC3_PHASEA_NC
VCC1V2_ISEN_P
VCC1V2_ISEN_N
VCC1V2_SNS_N
VCC1V2_SNS_P
R726 20
C459 0.1UF 25V
DAC_AVTT_SWITCH
L27 6.8UH
R727 20
C460 0.1UF 25V
L28 1.5UH
FMC_VADJ_SWITCH
R728 20
C463 0.1UF 25V
L29 1.5UH
FMC_VADJ_SWITCH
R417 698
R416 1.82K
Z18
DAC_AVTT_BUS
R409 0.005
J71 DNP
DAC_AVTT
DAC_AVTT_VIN_R_P
DAC_AVTT_VIN_R_N
C461 22UF 25V
C805 22UF 25V
C806 22UF 25V
C807 22UF 25V
R410 499
R411 499
C524 22UF 25V
C994 22UF 25V
DAC_AVTT_SNS_P
VADJ_FMC_BUS
R412 0.005
J72 DNP
VADJ_FMC
VADJ_FMC_VIN_R_P
VADJ_FMC_VIN_R_N
1.8V @ 5A
Z17
VADJ_FMC_SNS_P
C795 47UF 6.3V
C819 47UF 6.3V
MGT1V8_BUS
R413 0.005
J73 DNP
MGT1V8
MGT1V8_VIN_R_P
MGT1V8_VIN_R_N
1.8V @ 500mA
C468 22UF 25V
MGT1V8_SNS_P
7-BIT PMBUS ADDR: 0x45
7-BIT I2C ADDR: 0x15
XILINX
2100 Logic Drive
San Jose, CA 95124
PCB P/N : 1280976
ASSY P/N : 0432076
TEST P/N : TSS0192
Title: HW-Z1-ZCU111
051 PMIC 3
Ver 1.0
Size B
Date Modified: Tuesday, May 29, 2018
Document Number: 0381811
Rev 01
Engineer: BF
Sheet 51 of 75

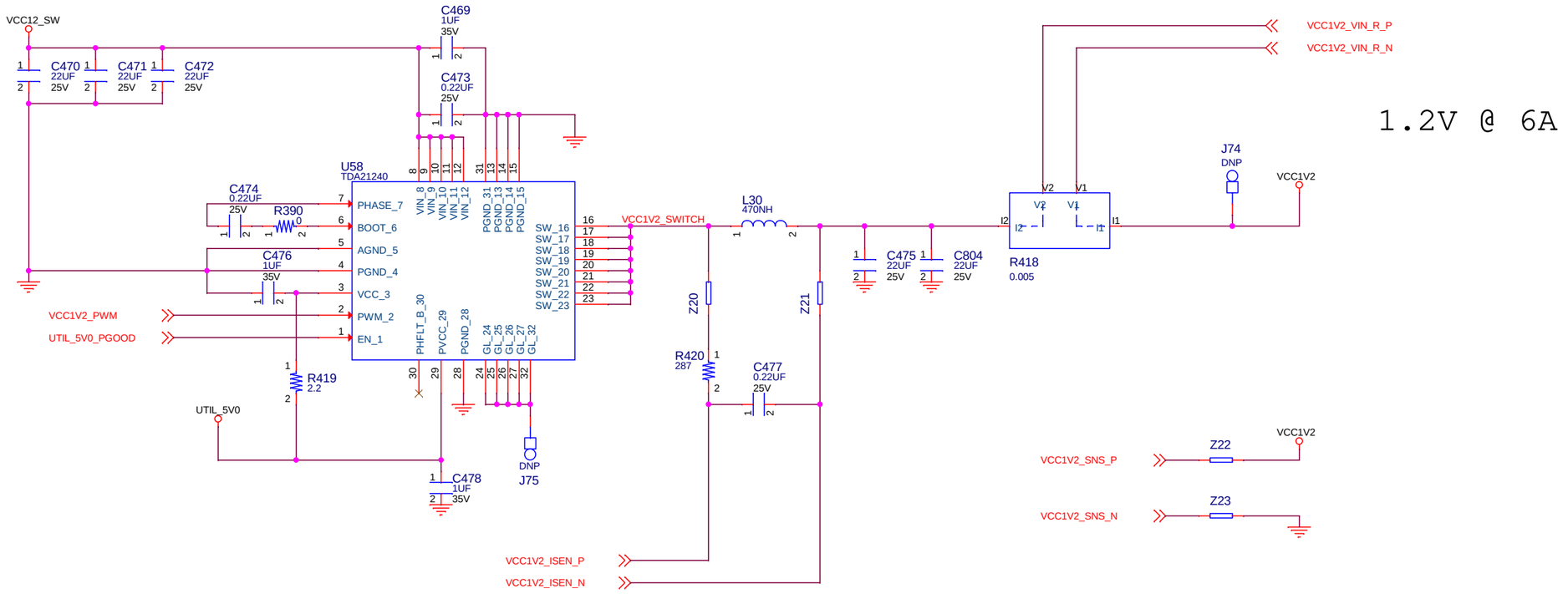

XILINX
2100 Logic Drive
San Jose, CA 95124

PCB P/N : 1280976
ASSY P/N : 0432076
TEST P/N : TSS0192

Title: HW-Z1-ZCU111
052 PMIC 3 Power Stage

Ver 1.0

Size	Date Modified:	Document Number:	Rev
B	Tuesday, May 29, 2018	0381811	01

Engineer: BF

I2C ADDR 0x41

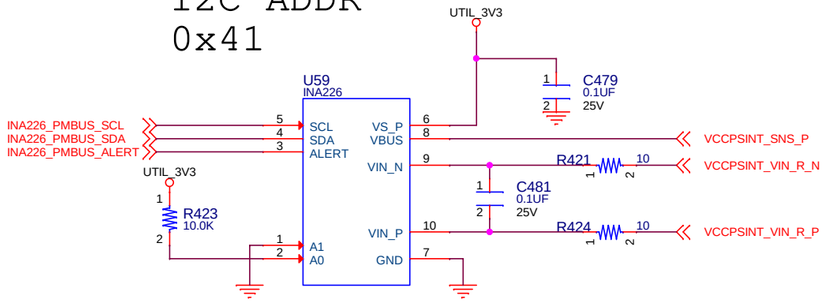

I2C ADDR 0x43

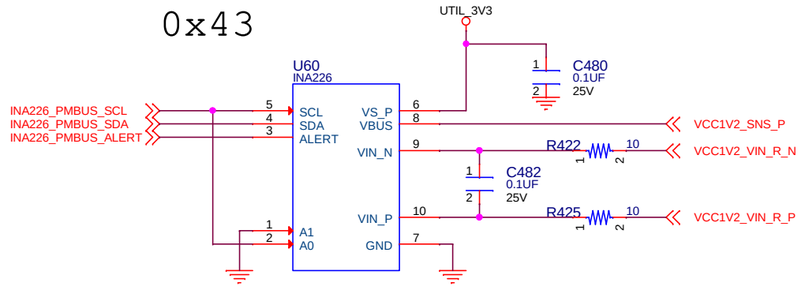

I2C ADDR 0x4A

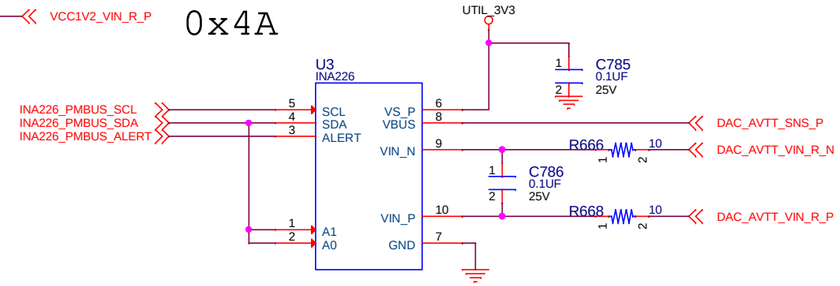

I2C ADDR 0x42

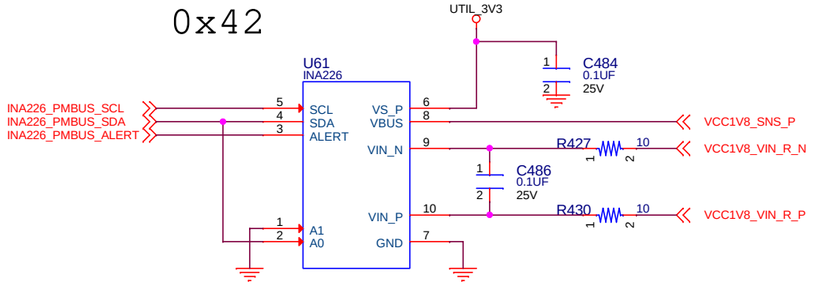

I2C ADDR 0x49

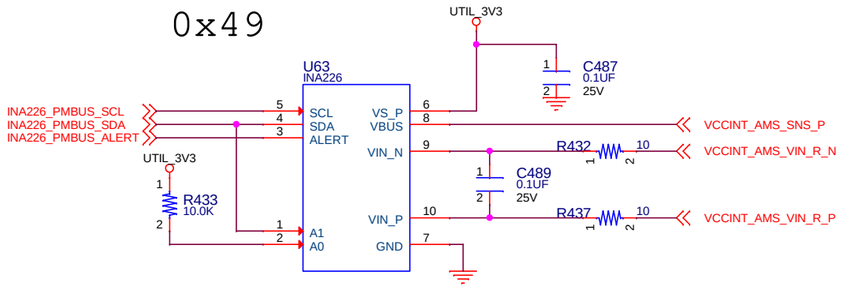

I2C ADDR 0x45

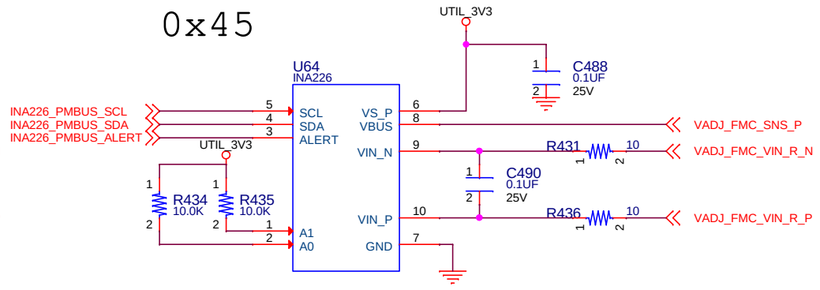

I2C ADDR 0x47

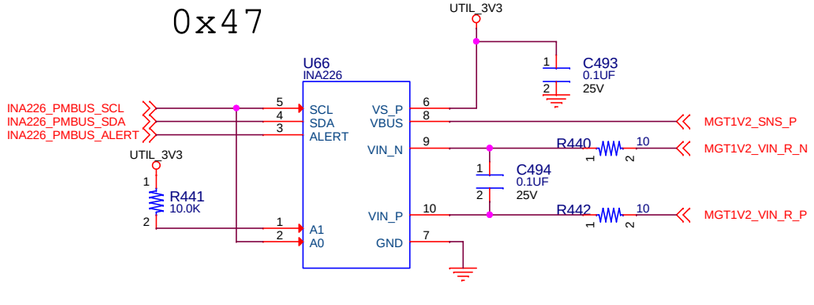

I2C ADDR 0x48

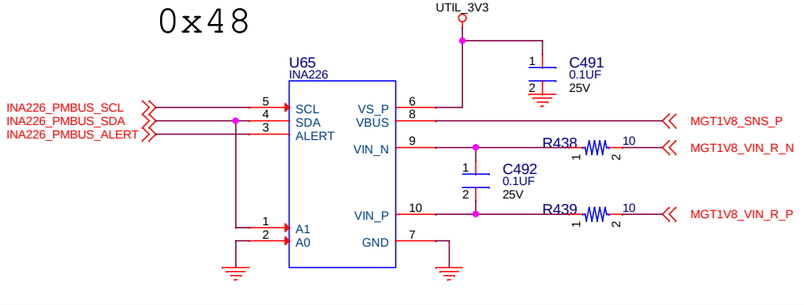

XILINX
2100 Logic Drive
San Jose, CA 95124

PCB P/N : 1280976
ASSY P/N : 0432076
TEST P/N : TSS0192

Title: HW-Z1-ZCU111
053 PMIC Current Sense

Ver 1.0

Size B | Date Modified: Tuesday, May 29, 2018 | Document Number: 0381811 | Rev 01

Engineer: BF | Sheet 53 of 75

I2C ADDR
0x40

0.85V @ 30A

U67
INA226
INA226_PMBUS_SCL
INA226_PMBUS_SDA
INA226_PMBUS_ALERT
SCL
SDA
ALERT
VS_P
VBUS
VIN_N
VIN_P
GND
A1
A0
UTIL_3V3
C495 0.1UF 25V
C496 0.1UF 25V
R443 10
R444 10

U68
IR38064
VCCINT_PGOOD
UTIL_5V0_PGOOD
C497 10UF 10V
VP
EN_FCCM
PGOOD
VCC_LDO_OUT
VIN
PVIN
PGND1
PGND2
BOOT
SW
VSNS
RS+
RS-
NC1
NC2
RT_SYNC
ADDR
LGND
RSO
FB
COMP
TRACK_EN_B
P1V8
SCL_OCSET
SDA_IMON
SALERT_B_TMON
VCC12_SW
C1032 22UF 25V
C1005 22UF 25V
C498 22UF 25V
C499 22UF 25V
C500 22UF 25V
C838 22UF 25V
C839 22UF 25V
C501 1UF 35V
C384 0.1UF 25V
C503 0.1UF 25V
R557 0
L31 120NH
VCCINT_SWITCH
VCCINT_BUS
C842 47UF 6.3V
C841 47UF 6.3V
C505 47UF 6.3V
C840 47UF 6.3V
C843 47UF 6.3V
C844 47UF 6.3V
R558 4.99K
VCCINT_VSNS
VCCINT_SNS_P
VCCINT_SNS_N
R569 7.15K
AGND_VCCINT

R729 20
C507 2200PF 50V
R449 130
R450 4.99K
C502 270PF 50V
C504 0.01UF 25V
R446 2.00K
R445 100K
VCCINT_FB
R539 7.15K
IRPS5401_SCL
IRPS5401_SDA
IRPS5401_ALERT_B
C506 2.2UF 6.3V
R448 DNP
R570 499
C837 0.01UF 25V
Z26

VCCINT_VIN_R_P
VCCINT_VIN_R_N
J76 DNP
VCCINT
R2
R1
R447 0.002
Z24
Z25

XILINX
2100 Logic Drive
San Jose, CA 95124

PCB P/N : 1280976
ASSY P/N : 0432076
TEST P/N : TSS0192

Title: HW-Z1-ZCU111
054 VCCINT 30A Regulator
Ver 1.0

Size B
Date Modified: Tuesday, May 29, 2018
Document Number: 0381811
Rev 01
Engineer: BF
Sheet 54 of 75

I2C ADDR
0x46

0.9V @ 3A

U69
INA226
UTIL_3V3
C508 0.1UF 25V
INA226_PMBUS_SCL
INA226_PMBUS_SDA
INA226_PMBUS_ALERT
SCL
SDA
ALERT
VS_P
VBUS
VIN_N
VIN_P
GND
A1
A0
R451 10.0K
C509 0.1UF 25V
R452 10
R453 10

U70
IR38060
MGTAVCC_PGOOD
UTIL_5V0_PGOOD
C510 10UF 10V
VP
EN_FCCM
PGOOD
VCC_LDO_OUT
VIN
PVIN
PGND1
PGND2
PGND3
BOOT
SW
VSNS
RS+
RS-
NC2
RT_SYNC
ADDR
LGND
VCC12_SW
C511 22UF 25V
C512 22UF 25V
C513 22UF 25V
C514 1UF 35V
C854 0.1UF 25V
C516 0.1UF 25V
R571 0
L32 1.2UH
MGTAVCC_SWITCH
MGTAVCC_BUS
C518 22UF 25V
C845 22UF 25V
R573 6.81K
MGTAVCC_VSNS
MGTAVCC_SNS_P
MGTAVCC_SNS_N
R574 8.45K
AGND_MGTAVCC
R730
RSO
R458 118
R459 6.81K
C520 2200PF 50V
C515 100PF 50V
R455 4.99K
C517 6200PF 100V
MGTAVCC_FB
FB
COMP
R454 100K
TRACK_EN_B
P1V8
R460 8.45K
IRPS5401_SCL
IRPS5401_SDA
IRPS5401_ALERT_B
SCL_OCSET
SDA_IMON
SALERT_B_TMON
C519 2.2UF 6.3V
R457 DNP
R575 1.05K
C857 0.01UF 25V
Z30
MGTAVCC_VIN_R_P
MGTAVCC_VIN_R_N
J77 DNP
MGTAVCC
R456 0.002
Z28
Z29

XILINX
2100 Logic Drive
San Jose, CA 95124

PCB P/N : 1280976
ASSY P/N : 0432076
TEST P/N : TSS0192

Title: HW-Z1-ZCU111
055 MGTAVCC 3A Regulator

Ver 1.0

Size B | Date Modified: Tuesday, May 29, 2018 | Document Number: 0381811 | Rev 01

Engineer: BF | Sheet 55 of 75

I2C ADDR
0x4B

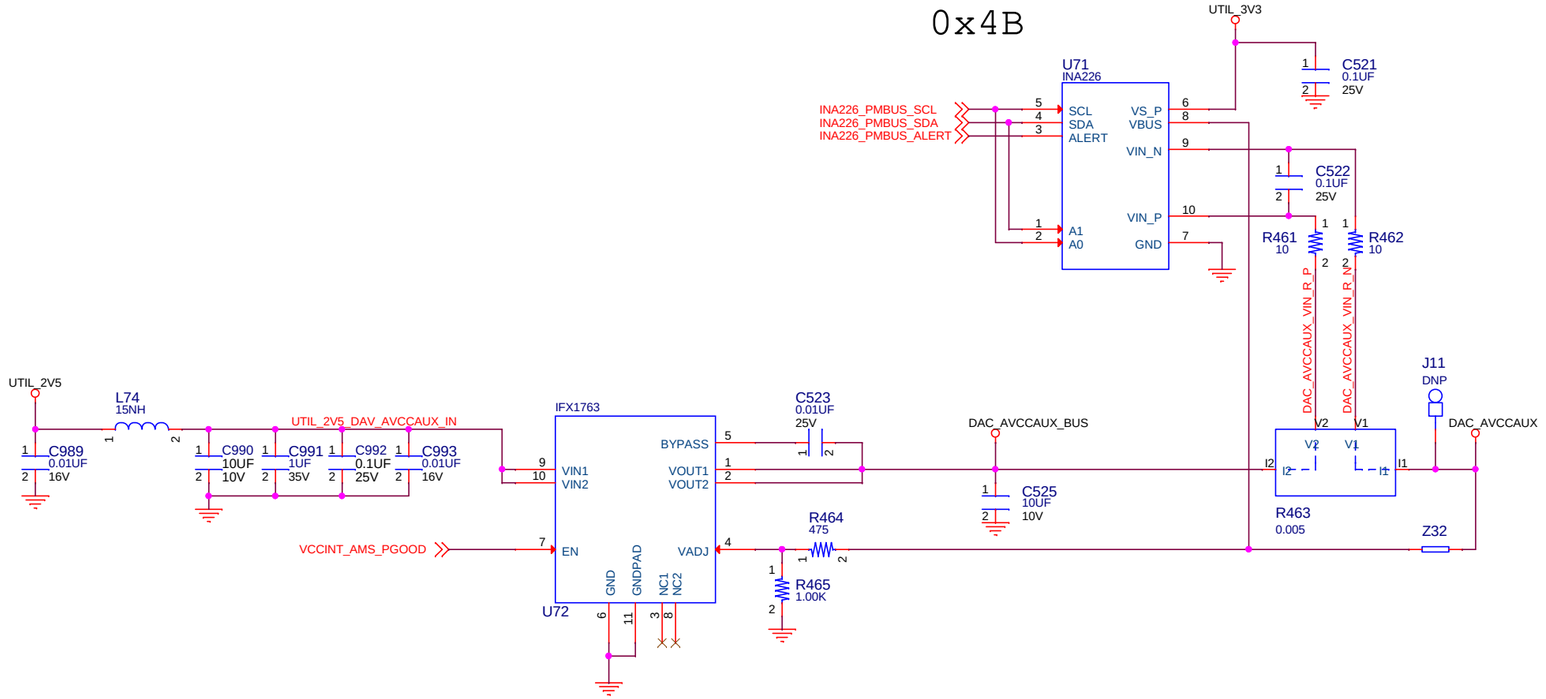

1.8V @ 500mA

XILINX
2100 Logic Drive
San Jose, CA 95124

PCB P/N : 1280976
ASSY P/N : 0432076
TEST P/N : TSS0192

Title: HW-Z1-ZCU111
056 DAC_AVCCAUX 500mA Regulator

Ver 1.0

Size B | Date Modified: Tuesday, May 29, 2018 | Document Number: 0381811 | Rev 01

Engineer: BF | Sheet 56 of 75

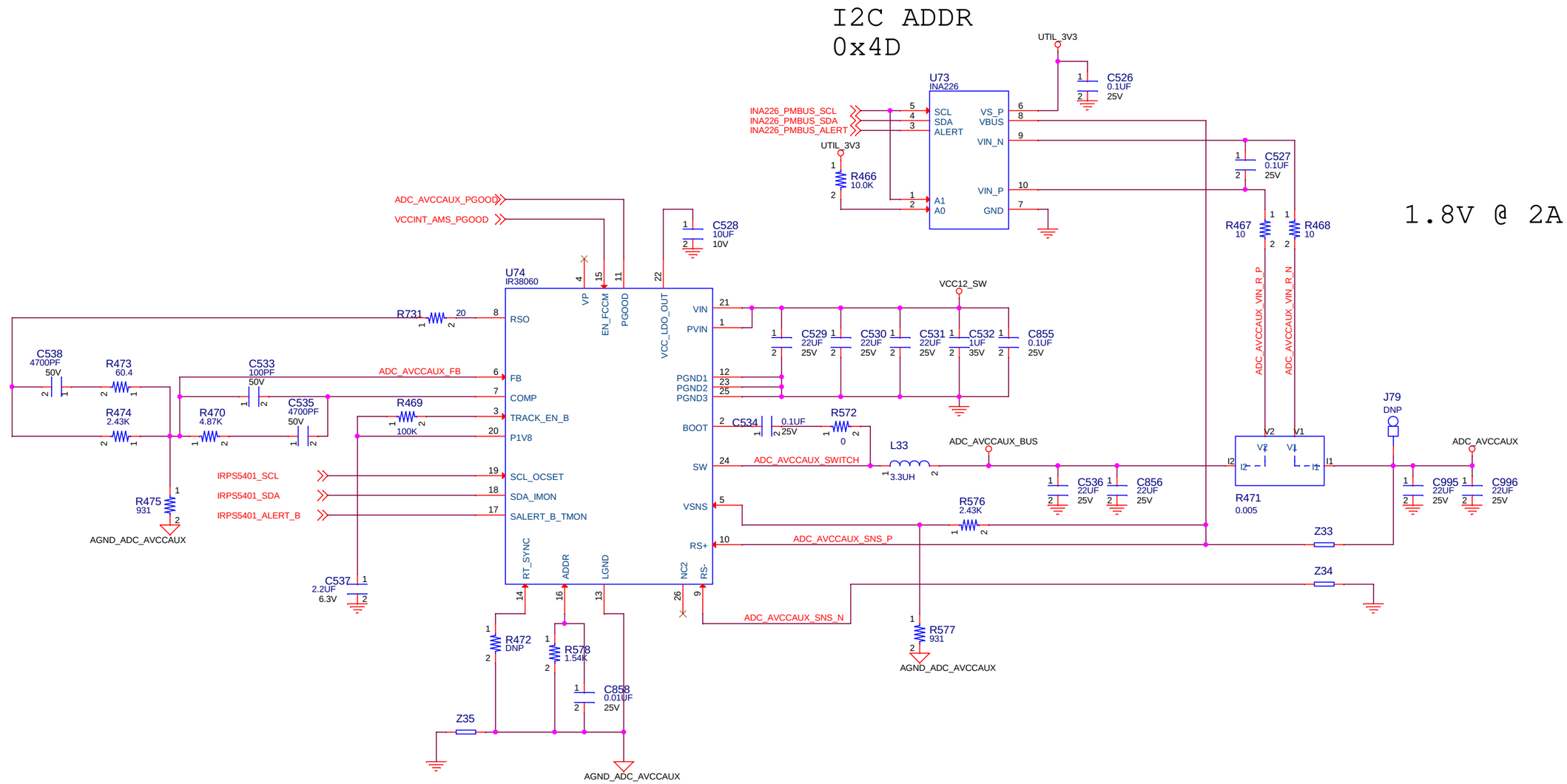

XILINX
2100 Logic Drive
San Jose, CA 95124

PCB P/N : 1280976
ASSY P/N : 0432076
TEST P/N : TSS0192

Title: HW-Z1-ZCU111
057 ADC_AVCCAUX 2A Regulator

Ver 1.0

Size B | Date Modified: Tuesday, May 29, 2018 | Document Number: 0381811 | Rev 01

Engineer: BF | Sheet 57 of 75

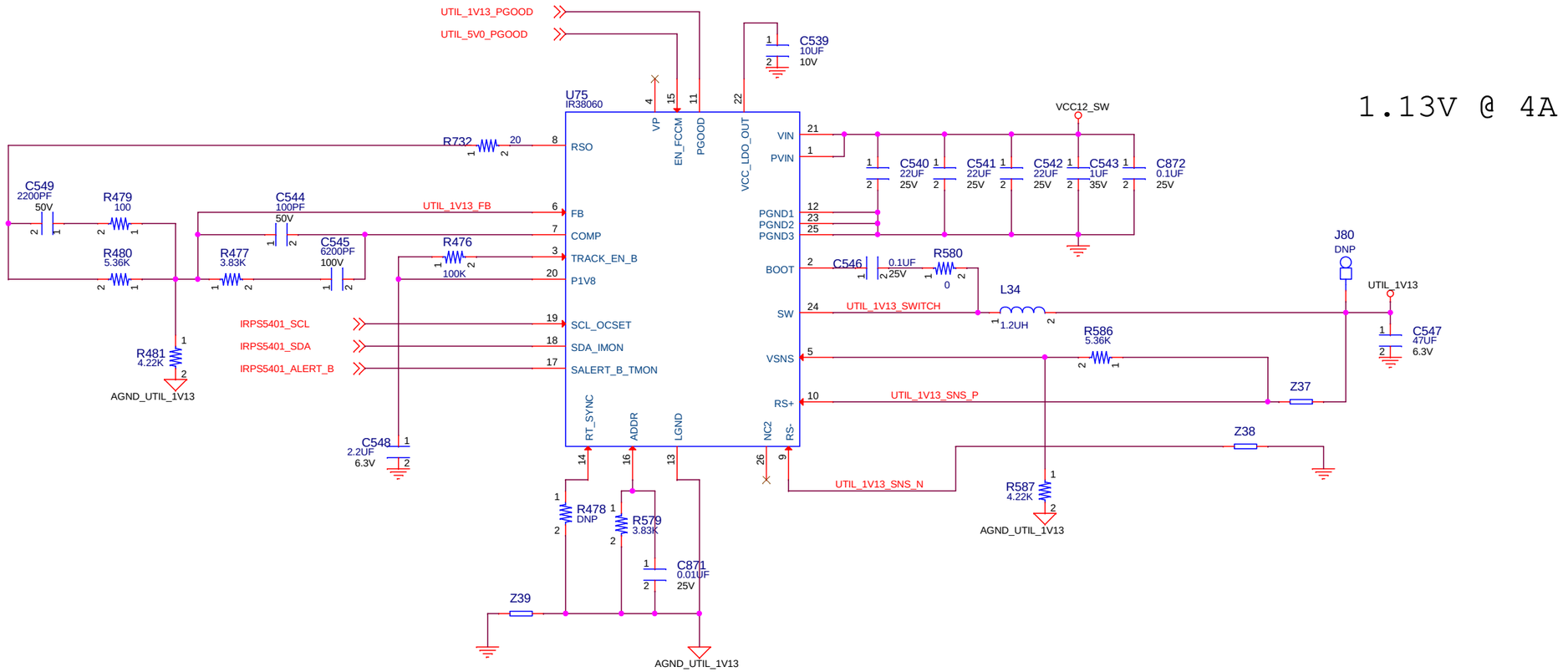

XILINX
2100 Logic Drive
San Jose, CA 95124

PCB P/N : 1280976
ASSY P/N : 0432076
TEST P/N : TSS0192

Title: HW-Z1-ZCU111
058 UTIL_1V13 4A Regulator

Ver 1.0

Size	Date Modified:	Document Number:	Rev
B	Tuesday, May 29, 2018	0381811	01

Engineer: BF

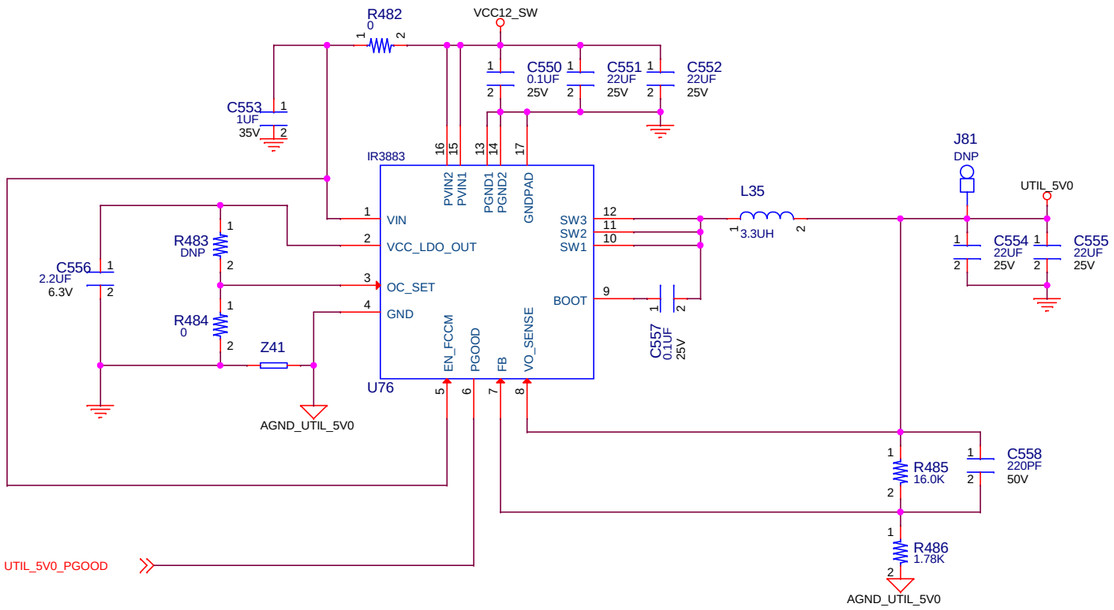

5.0V @ 2.7A

XILINX
2100 Logic Drive
San Jose, CA 95124

PCB P/N : 1280976
ASSY P/N : 0432076
TEST P/N : TSS0192

Title: HW-Z1-ZCU111
059 UTIL_5V0 2.7A Regulator

Ver 1.0

Size	Date Modified:	Document Number:	Rev
B	Tuesday, May 29, 2018	0381811	01

Engineer: BF

I2C ADDR
0x4C

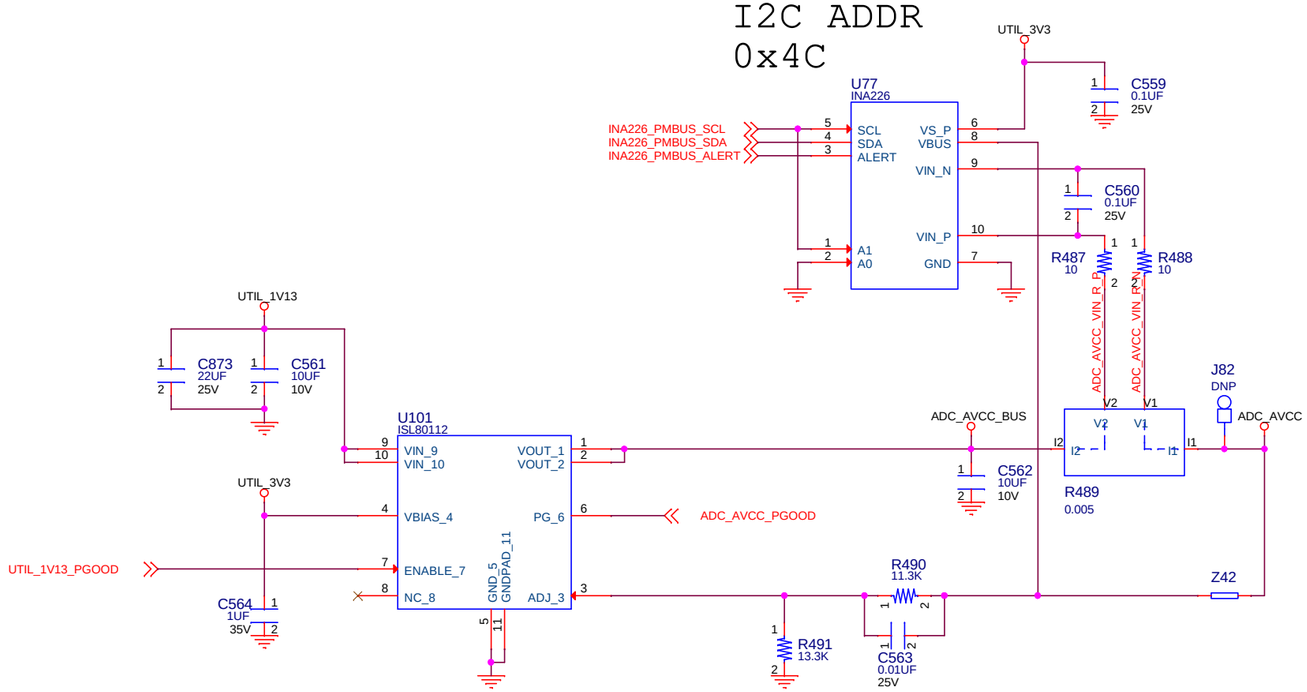

0.925V @ 2A

I2C ADDR
0x4E

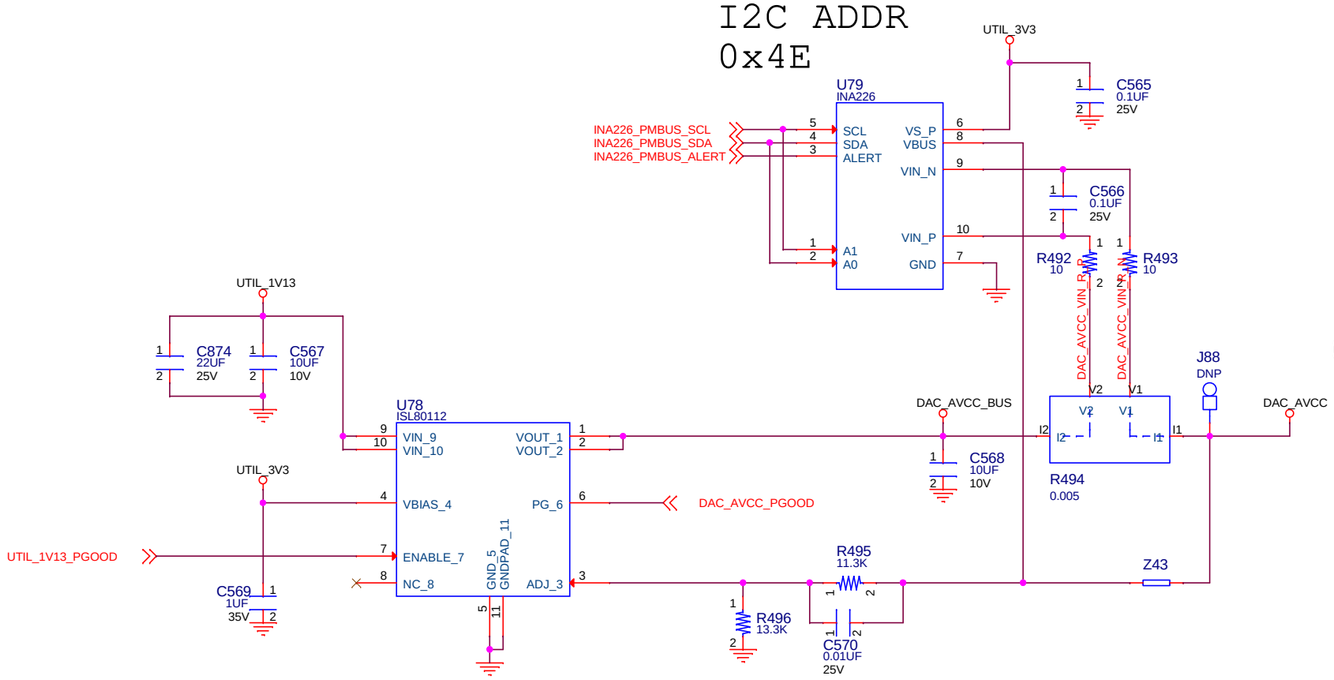

0.925V @ 1A

XILINX
2100 Logic Drive
San Jose, CA 95124

PCB P/N : 1280976
ASSY P/N : 0432076
TEST P/N : TSS0192

Title: HW-Z1-ZCU111
060 ADC_AVCC DAC_AVCC Reglators

Ver 1.0

Size B | Date Modified: Tuesday, May 29, 2018 | Document Number: 0381811 | Rev 01

Engineer: BF | Sheet 60 of 75

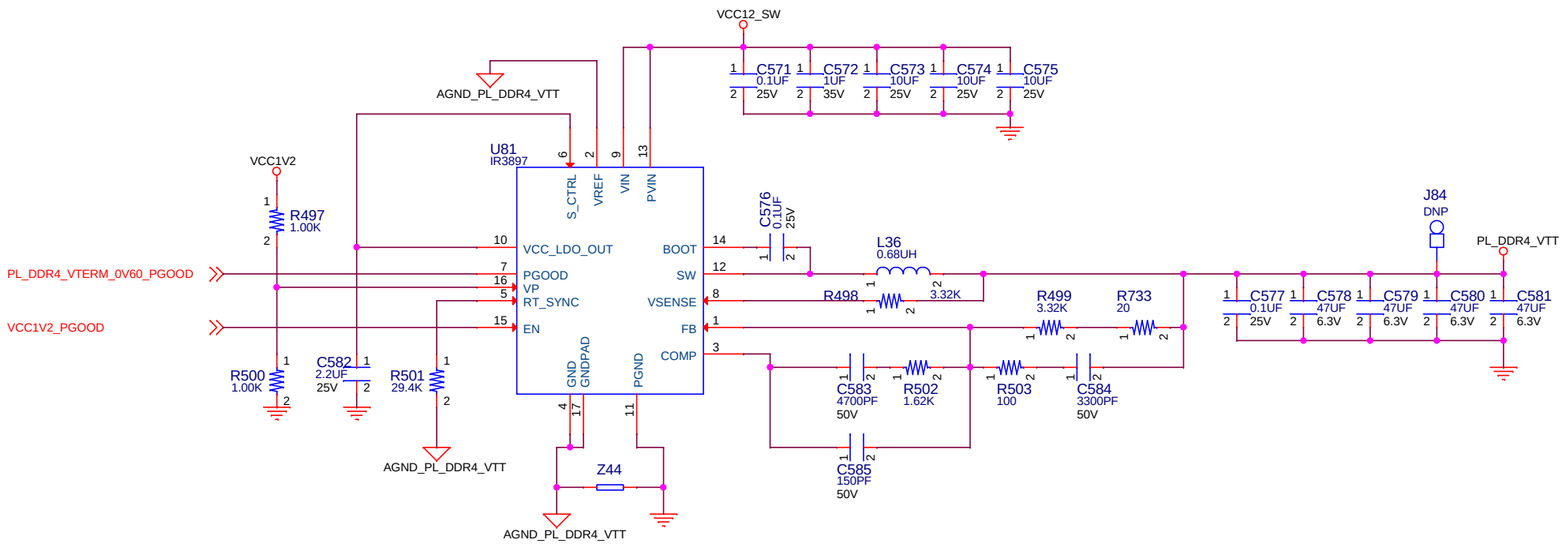

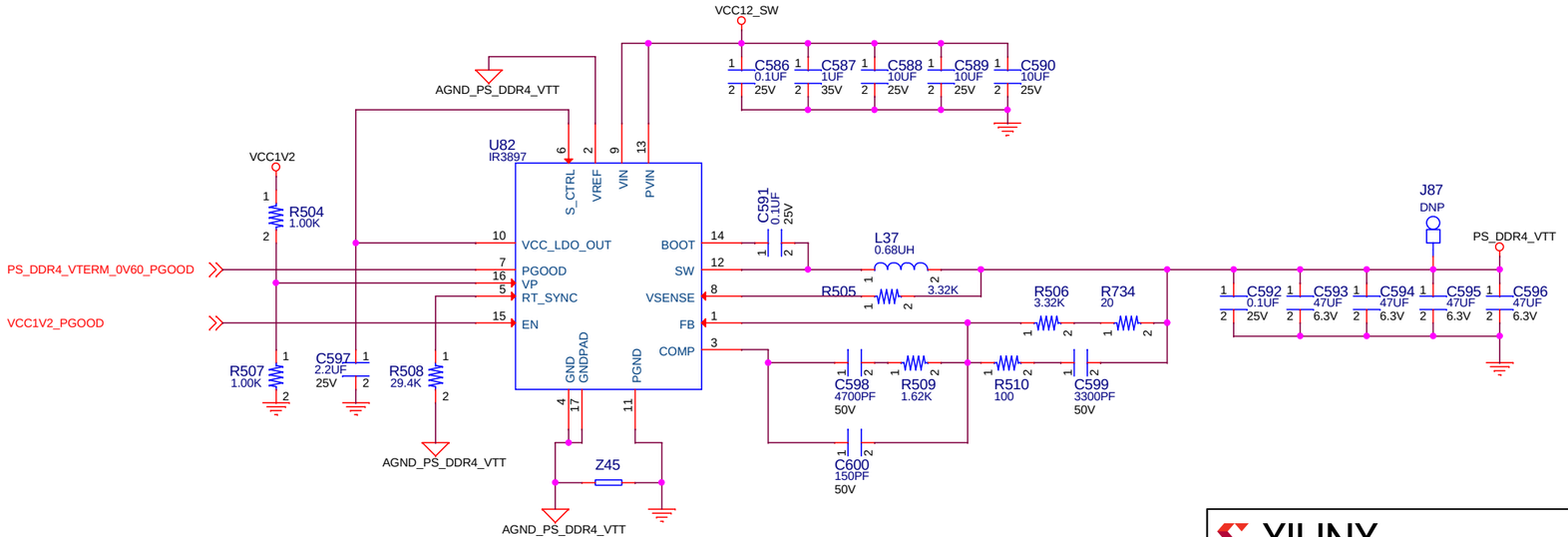

XILINX
2100 Logic Drive
San Jose, CA 95124

PCB P/N : 1280976
ASSY P/N : 0432076
TEST P/N : TSS0192

Title: HW-Z1-ZCU111
061 DDR4 Termination Regulators

Ver 1.0

Size B | Date Modified: Tuesday, May 29, 2018 | Document Number: 0381811 | Rev 01

Engineer: BF | Sheet 61 of 75

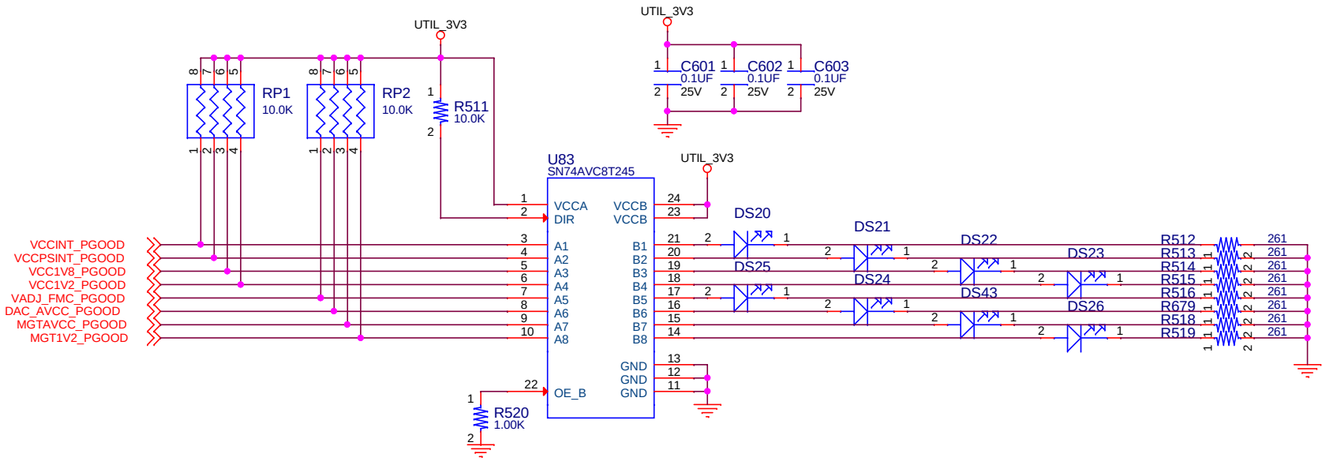

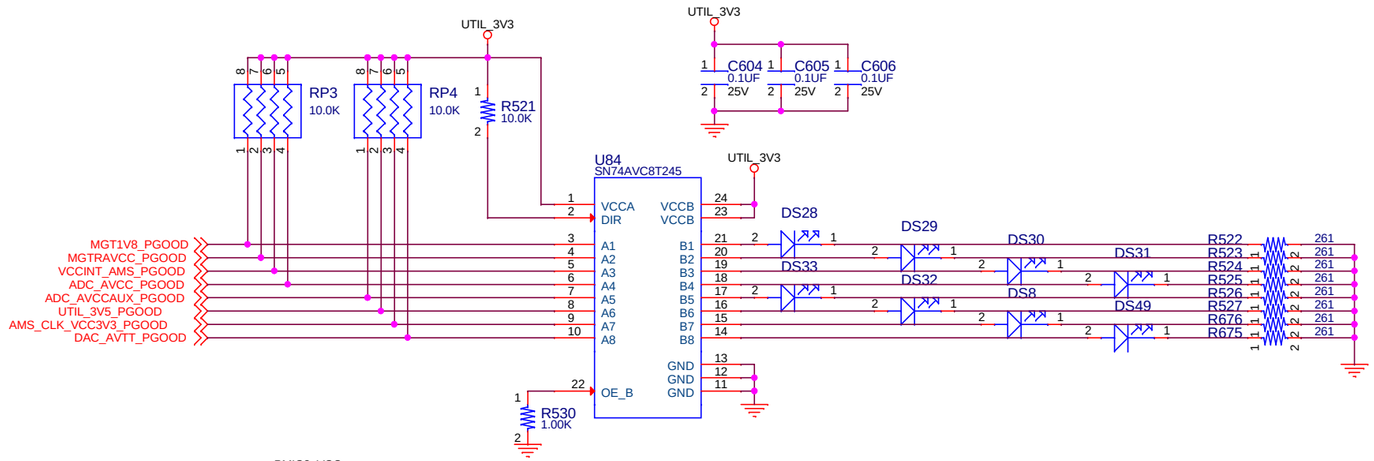

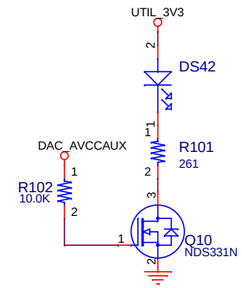

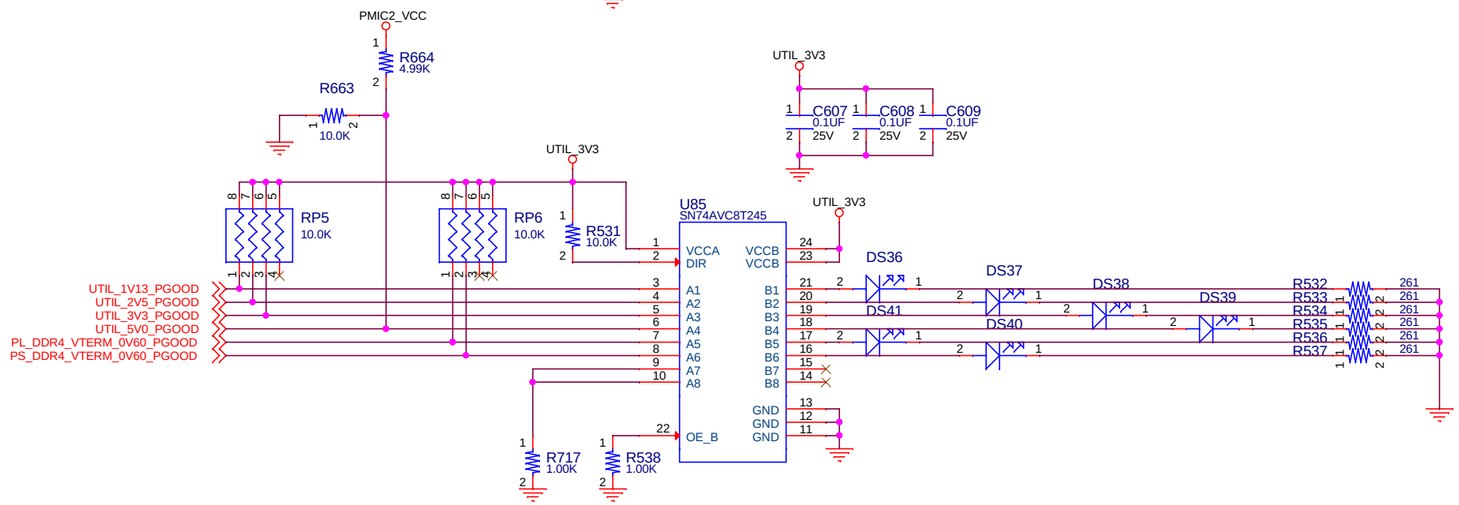

XILINX
2100 Logic Drive
San Jose, CA 95124

PCB P/N : 1280976
ASSY P/N : 0432076
TEST P/N : TSS0192

Title: HW-Z1-ZCU111
062 Power Good LEDs

Ver 1.0

Size B | Date Modified: Tuesday, May 29, 2018 | Document Number: 0381811 | Rev 01

Engineer: BF

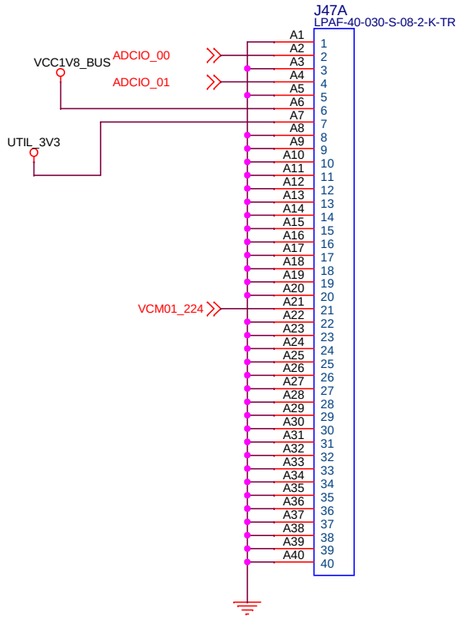

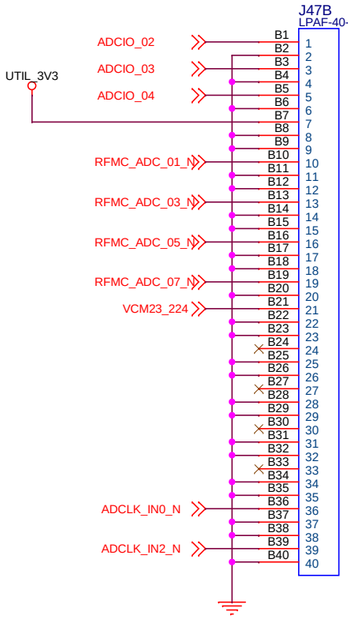

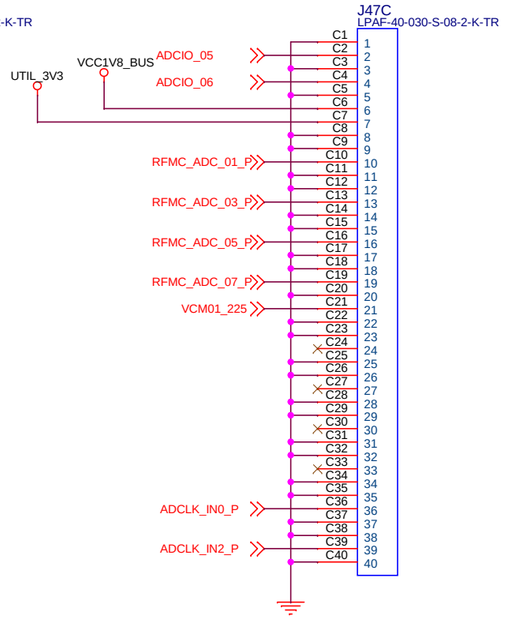

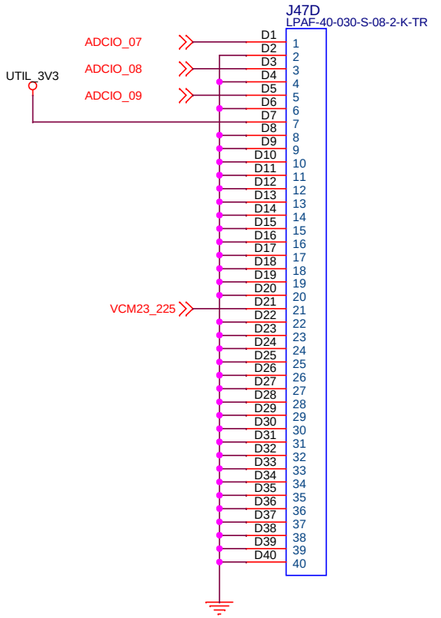

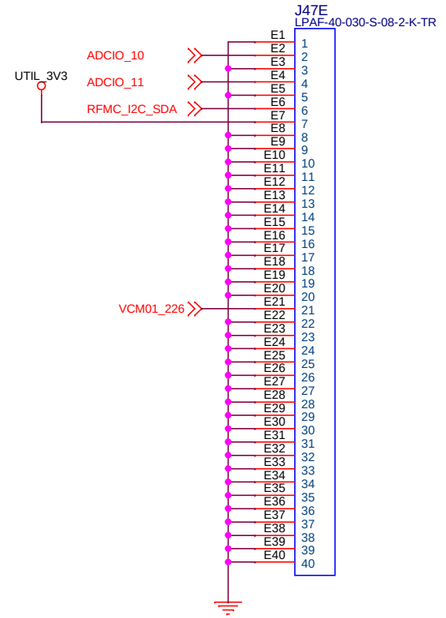

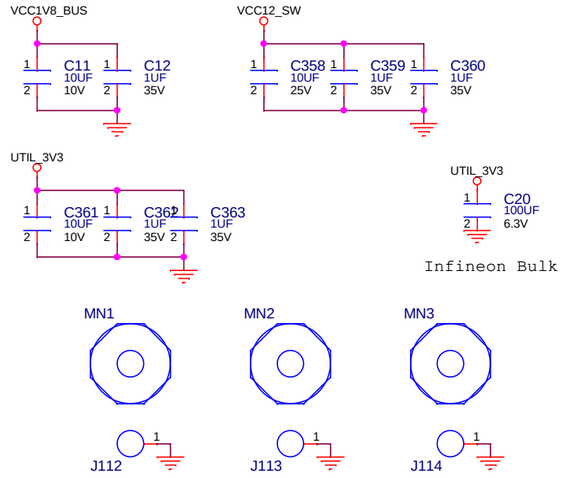

XILINX
2100 Logic Drive
San Jose, CA 95124

PCB P/N : 1280976
ASSY P/N : 0432076
TEST P/N : TSS0192

Title: HW-Z1-ZCU111
063 LPAF Connector 1

Ver 1.0

Size	Date Modified:	Document Number:	Rev
B	Tuesday, May 29, 2018	0381811	01

Engineer: BF

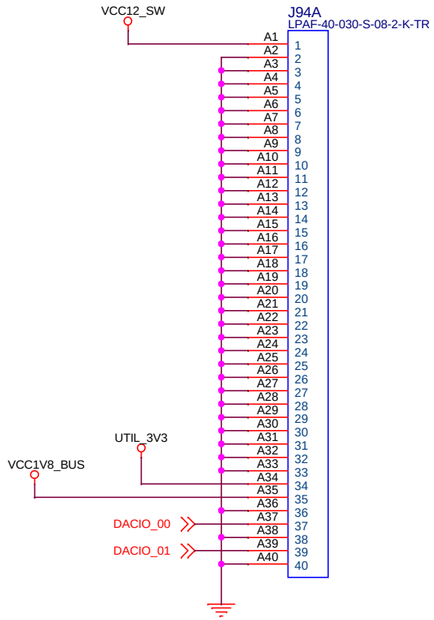

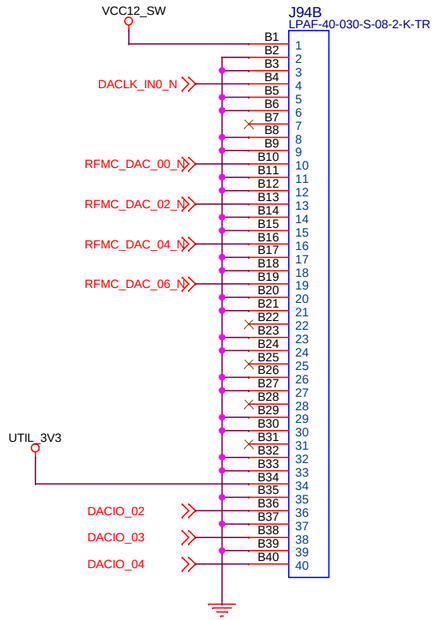

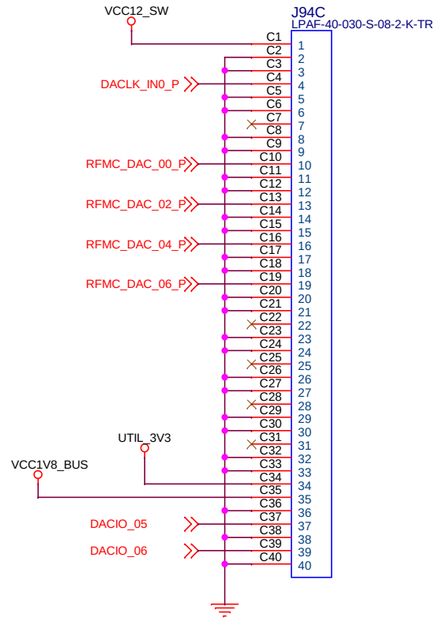

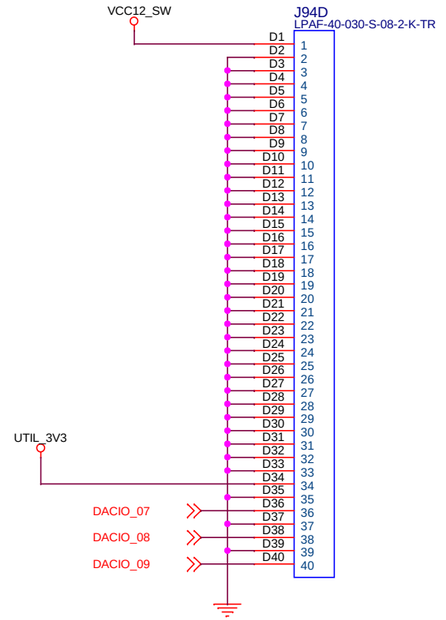

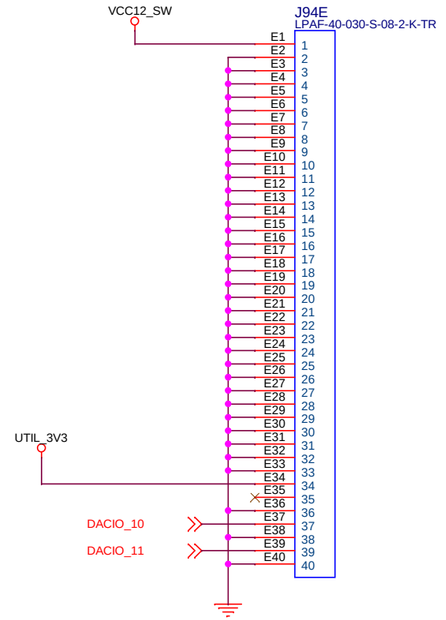

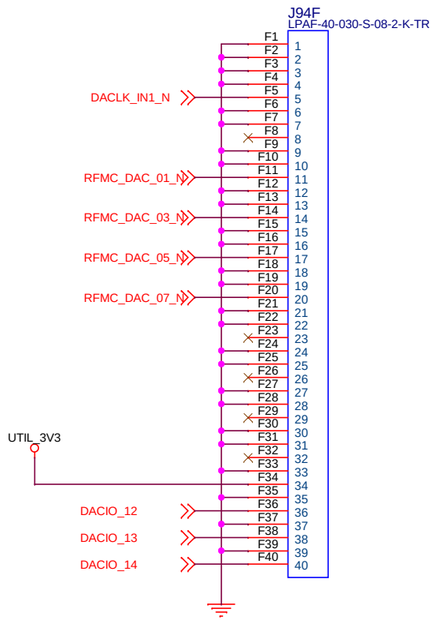

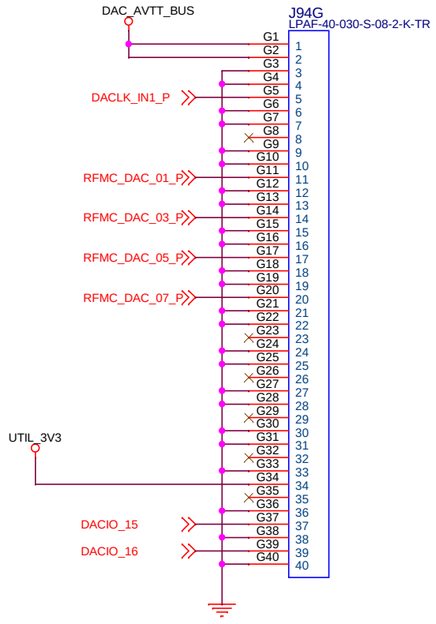

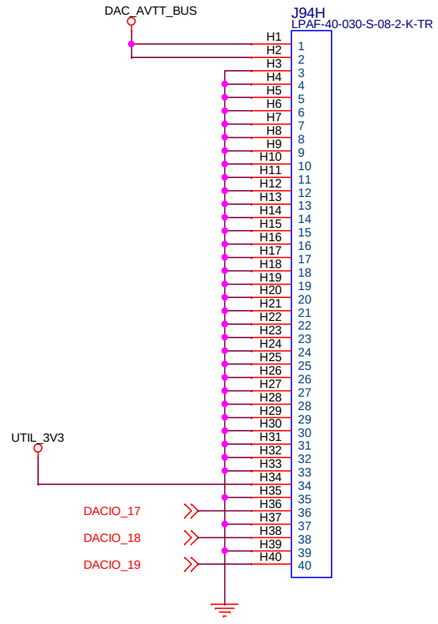

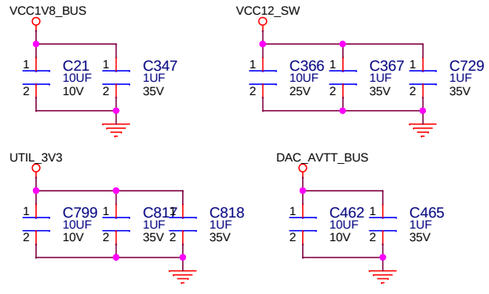

XILINX
2100 Logic Drive
San Jose, CA 95124

PCB P/N : 1280976
ASSY P/N : 0432076
TEST P/N : TSS0192

Title: HW-Z1-ZCU111
064 LPAF Connector 2

Ver 1.0

Size B | Date Modified: Tuesday, May 29, 2018 | Document Number: 0381811 | Rev 01

Engineer: BF | Sheet 64 of 75

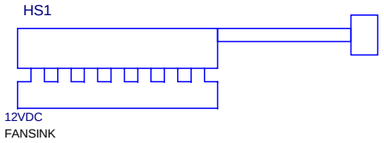

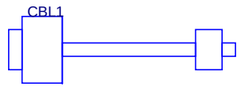

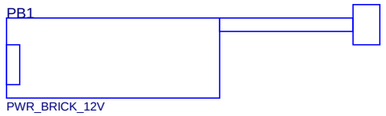

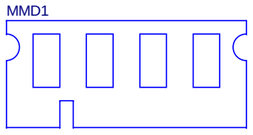

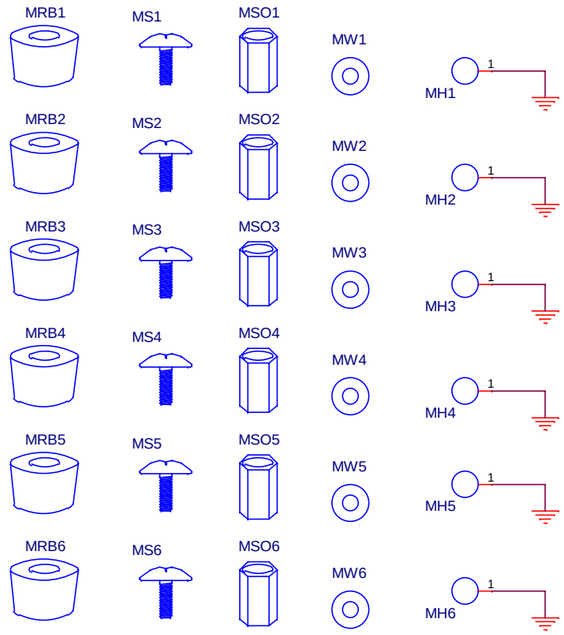

XILINX
2100 Logic Drive
San Jose, CA 95124

PCB P/N : 1280976
ASSY P/N : 0432076
TEST P/N : TSS0192

Title: HW-Z1-ZCU111
065 Mechanicals

Ver 1.0

Size B | Date Modified: Tuesday, May 29, 2018 | Document Number: 0381811 | Rev 01

Engineer: BF

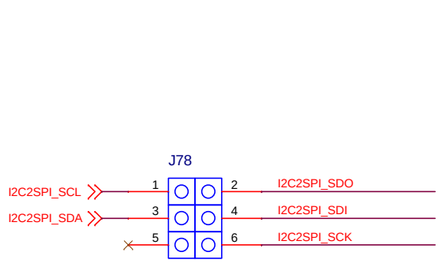

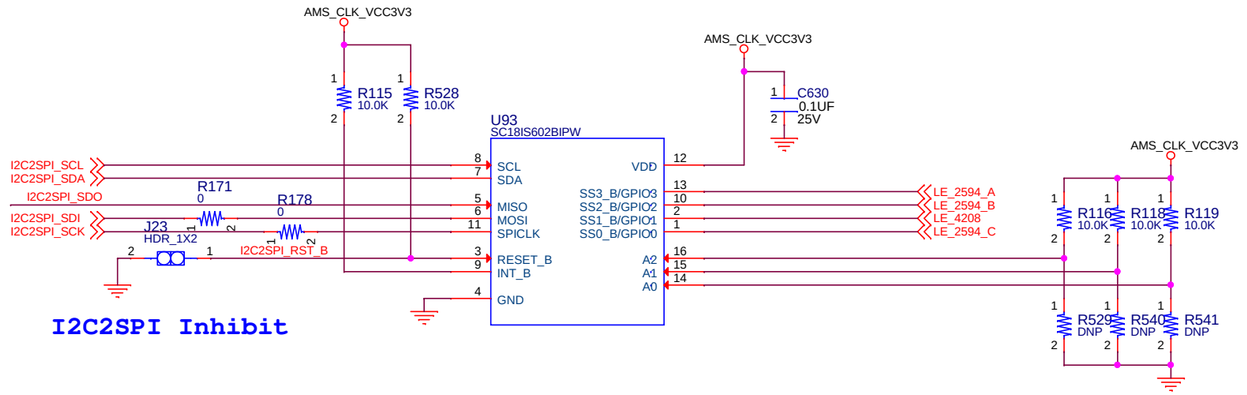

I2C2SPI Inhibit

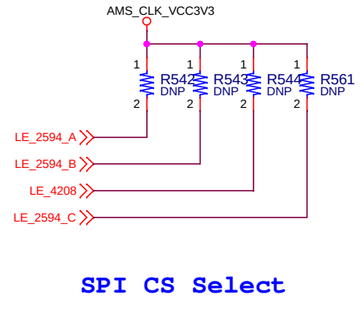

SPI CS Select

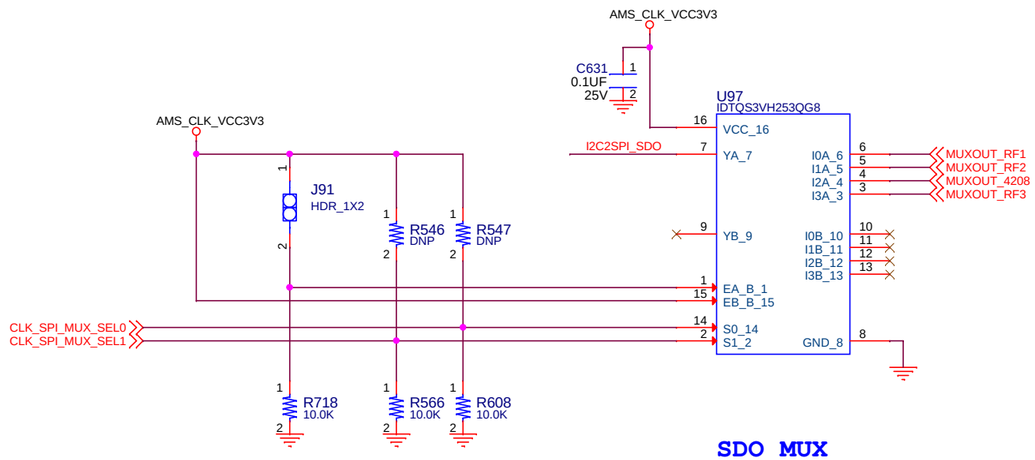

SDO MUX

XILINX
2100 Logic Drive
San Jose, CA 95124

PCB P/N : 1280976
ASSY P/N : 0432076
TEST P/N : TSS0192

Title: HW-Z1-ZCU111
066 SPI Header - I2C2SPI Bridge

Ver 1.0

Size B | Date Modified: Tuesday, May 29, 2018 | Document Number: 0381811 | Rev 01

Engineer: BF | Sheet 66 of 75

GP PLL LMK04208

R&C to be placed as close as possible to device

PLL Supply Plane

Clock Supply Plane

EXTERNAL VCXO for PLL1

OSCin optional Attenuation

SYSREF_FPGA DIFF

SYSREF_RFSOC DIFF

FPGA_REFCLK_OUT DIFF

10~20MHz Single-ended

REFIN_2594 DIFF

SYNC Single-ended

EXTERNAL INPUT REFERENCE

CLKin0 Attenuation

TCXO INPUT REFERENCE

CMOS TCXO OUTPUT

XILINX 2100 Logic Drive San José, CA 95124	PCB P/N : 1280976 ASSY P/N : 0432076 TEST P/N : TSS0192
Title: HW-Z1-ZCU111 067 AMS REFCLK Distribution	Ver 1.0
Size B · Date Modified: Thursday, July 12, 2018 · Document Number: 0381811	Rev 01
Engineer: BF	Sheet 67 of 75

RF PLL#1 LMX2594

R&C to be placed as close as possible to device

Overlay DNP cap pad to support external clock

AMS_CLK_VCC3V3
L43 15NH
C960 0.01UF 16V
C634 10UF 10V
C963 0.01UF 16V
VCCRFA_BUF
C635 10UF 10V
C636 0.1UF 25V
C637 10UF 10V
C638 0.1UF 25V
C639 0.1UF 25V

AMS_CLK_VCC3V3
L44 15NH
C961 0.01UF 16V
C641 10UF 10V
C962 0.01UF 16V
VCC_2594A
C642 10UF 10V
C643 0.1UF 25V
C644 10UF 10V
C645 0.1UF 25V

C648 0.1UF 25V
C649 0.1UF 25V
C650 0.1UF 25V
C651 0.1UF 25V
C652 0.1UF 25V

C653 1UF
C654 10UF
C655 1UF
C660 10UF
C661 10UF
C662 1UF
C663 10UF

VCC_2594A
R564 DNP
R563 10.0K
CE_2594A

REFIN_2594A_P
REFIN_2594A_N
100ohm Trace Differential
C664 0.1UF
R552 100
C665 0.1UF
LMX2594A_SYNC
50ohm Trace
R677 0

U102
LMX2594RHAT

21	VCC_BUF
11	VCC_CP
15	VCC_MASH
7	VCC_DIG
26	VCC_VCO2
37	VCC_VCO
10	VREG_IN
36	VREF_VCO
38	VREG_VCO
29	VREF_VCO2
3	VBIAS_VCO
27	VBIAS_VCO2
33	VBIAS_VARAC
1	CE
8	OSCIN_P
9	OSCIN_M
5	SYNC
28	SYSREFREQ
23	RF_OUTA_P
22	RF_OUTA_M
19	RF_OUTB_P
18	RF_OUTB_M
12	CPOUT
35	VTUNE
24	CSB
17	SDI
16	SCK
20	MUX_OUT
2, 4, 6, 13, 14, 25, 31, 34, 39, 40	GND_2, GND_4, GND_6, GND_13, GND_14, GND_25, GND_31, GND_34, GND_39, GND_40
41	DAP
30	RAMPCLK
32	RAMPDIR

RF1_CLKO_A_P
C632 100PF 50V
C948 DNP
R97 49.9
VCCRFA_BUF
C633 DNP
C1006 100PF 16V
C1007 100PF 16V
R706 49.9
RF1_CLKO_A_N
C640 100PF 50V
C949 DNP
ADCLK_IN0_P
RF1_CLKO_A_C_P
RF1_CLKO_A_C_N
ADCLK_IN0_N
100ohm Trace Differential

RF1_CLKO_B_P
C646 100PF
C1018 DNP
R707 49.9
VCCRFA_BUF
C647 DNP
C1008 100PF 16V
C1009 100PF 16V
R708 49.9
RF1_CLKO_B_N
C718 100PF
C1019 DNP
ADCLK_IN1_P
RF1_CLKO_B_C_P
RF1_CLKO_B_C_N
ADCLK_IN1_N
100ohm Trace Differential

R559 0
R560 18
C656 0.068UF 10V
C657 390PF 50V
C658 1800PF
C659 DNP
R562 68.1
R73 12.0K
LE_2594_A
R79 12.0K
I2C2SPI_SDI
R194 12.0K
I2C2SPI_SCK
MUXOUT_RF1

MUXOUT_RF1
DS34
R565 330
RECAGE2
GND1 GND2 GND3 GND4 GND5 GND6

R&C to be placed as close as possible to device

XILINX
2100 Logic Drive
San Jose, CA 95124

PCB P/N : 1280976
ASSY P/N : 0432076
TEST P/N : TSS0192

Title: HW-Z1-ZCU111
068 ADC RFPLL1

Ver 1.0

Size	Date Modified:	Document Number:	Rev
B	Tuesday, May 29, 2018	0381811	01

Engineer: BF

RF PLL#2 LMX2594

R&C to be placed as close as possible to device

Overlay DNP cap pad to support external clock

AMS_CLK_VCC3V3 — L47 15NH — C957 0.01UF 16V — C685 10UF 10V — C959 0.01UF 16V

VCCRFB_BUF — C686 10UF 10V — C687 0.1UF 25V — C688 10UF 10V — C689 0.1UF 25V — C346 0.01UF 16V

C691 0.1UF 25V

AMS_CLK_VCC3V3 — L50 15NH — C956 0.01UF 16V — C693 10UF 10V — C958 0.01UF 16V

VCC_2594B — C694 10UF 10V — C695 0.1UF 25V — C696 10UF 10V — C697 0.1UF 25V — C820 0.01UF 16V

C700 0.1UF 25V — C701 0.1UF 25V — C702 0.1UF 25V — C703 0.1UF 25V — C704 0.1UF 25V

C705 1UF — C706 10UF — C707 1UF — C712 10UF — C713 10UF — C714 1UF — C715 10UF

VCC_2594B — R604 10.0K — R605 DNP

CE_2594B

REFIN_2594B_P — C716 0.1UF — R553 100 — C717 0.1UF — REFIN_2594B_N

100ohm Trace Differential

LMX2594B_SYNC — R517 0 — 50ohm Trace

U103 LMX2594RHAT

21	VCC_BUF
11	VCC_CP
15	VCC_MASH
7	VCC_DIG
26	VCC_VCO2
37	VCC_VCO
10	VREG_IN
36	VREF_VCO
38	VREG_VCO
29	VREF_VCO2
3	VBIAS_VCO
27	VBIAS_VCO2
33	VBIAS_VARAC
1	CE
8	OSCIN_P
9	OSCIN_M
5	SYNC
28	SYSREFREQ
23	RF_OUTA_P
22	RF_OUTA_M
19	RF_OUTB_P
18	RF_OUTB_M
12	CPOUT
35	VTUNE
24	CSB
17	SDI
16	SCK
20	MUX_OUT
2, 4, 6, 13, 14, 25, 31, 34, 39, 40	GND_2, GND_4, GND_6, GND_13, GND_14, GND_25, GND_31, GND_34, GND_39, GND_40
41	DAP
30	RAMPCLK
32	RAMPDIR

RF2_CLKO_A_P — C683 100PF — C951 DNP — R709 49.9 — C684 DNP — C1010 100PF 16V — C1011 100PF 16V — R710 49.9 — C690 100PF — C950 DNP — RF2_CLKO_A_N

VCCRFB_BUF

RF2_CLKO_B_P — C692 100PF — C1020 DNP — R711 49.9 — C698 DNP — C1012 100PF 16V — C1013 100PF 16V — R712 49.9 — C699 100PF — C1021 DNP — RF2_CLKO_B_N

VCCRFB_BUF

R244 12.0K — LE_2594_B

R598 0 — R599 18 — C710 1800PF — C711 DNP — C708 0.068UF 10V — C709 390PF 50V — R603 68.1

R316 12.0K — I2C2SPI_SDI

R319 12.0K — I2C2SPI_SCK

MUXOUT_RF2

MUXOUT_RF2 — DS35 — R600 330

RECAGE3 — GND1 GND2 GND3 GND4 GND5 GND6

ADCLK_IN2_P — 100ohm Trace Differential — RF2_CLKO_A_C_P — 100ohm Trace Differential — RF2_CLKO_A_C_N — ADCLK_IN2_N — 100ohm Trace Differential

ADCLK_IN3_P — 100ohm Trace Differential — RF2_CLKO_B_C_P — 100ohm Trace Differential — RF2_CLKO_B_C_N — ADCLK_IN3_N — 100ohm Trace Differential

R&C to be placed as close as possible to device

XILINX
2100 Logic Drive
San Jose, CA 95124

PCB P/N : 1280976
ASSY P/N : 0432076
TEST P/N : TSS0192

Title: HW-Z1-ZCU111
069 ADC RFPLL2

Ver 1.0

Size B | Date Modified: Tuesday, May 29, 2018 | Document Number: 0381811 | Rev 01

Engineer: BF | Sheet 69 of 75

RF PLL#3 LMX2594

R&C to be placed as close as possible to device

AMS_CLK_VCC3V3
L65 15NH
C955 0.01UF 16V
C668 10UF 10V
C344 0.01UF 16V
VCCRFC_BUF
C669 10UF 10V
C670 0.1UF 25V
C671 10UF 10V
C672 0.1UF 25V
C674 0.1UF 25V

AMS_CLK_VCC3V3
L68 15NH
C954 0.01UF 16V
C676 10UF 10V
C345 0.01UF 16V
VCC_2594C
C677 10UF 10V
C678 0.1UF 25V
C679 10UF 10V
C680 0.1UF 25V

C719 0.1UF 25V
C720 0.1UF 25V
C721 0.1UF 25V
C722 0.1UF 25V
C723 0.1UF 25V

U104
LMX2594RHAT

21	VCC_BUF	RF_OUTA_P	23
11	VCC_CP	RF_OUTA_M	22
15	VCC_MASH	RF_OUTB_P	19
7	VCC_DIG	RF_OUTB_M	18
26	VCC_VCO2		
37	VCC_VCO	CPOUT	12
10	VREG_IN	VTUNE	35
36	VREF_VCO	CSB	24
38	VREG_VCO	SDI	17
29	VREF_VCO2	SCK	16
3	VBIAS_VCO	MUX_OUT	20
27	VBIAS_VCO2	GND_2	2
33	VBIAS_VARAC	GND_4	4
1	CE	GND_6	6
8	OSCIN_P	GND_13	13
9	OSCIN_M	GND_14	14
5	SYNC	GND_25	25
28	SYSREFREQ	GND_31	31
		GND_34	34
		GND_39	39
		GND_40	40
		DAP	41
		RAMPCLK	30
		RAMPDIR	32

C724 1UF
C725 10UF
C726 1UF
C810 10UF
C811 10UF
C812 1UF
C813 10UF

VCC_2594C
R584 10.0K
R585 DNP
CE_2594C

REFIN_2594C_P
C814 0.1UF
REFIN_2594C_C_P
R554 100
C815 0.1UF
REFIN_2594C_C_N
REFIN_2594C_N
100ohm Trace Differential

LMX2594C_SYNC
R678 0
50ohm Trace

RF3_CLKO_A_P
C666 100PF
C1024 DNP
R713 49.9
VCCRFC_BUF
C667 DNP
C1014 100PF 16V
C1015 100PF 16V
R714 49.9
RF3_CLKO_A_N
C673 100PF
C1025 DNP
100ohm Trace Differential
DACLK_IN0_P
RF3_CLKO_A_C_P
RF3_CLKO_A_C_N
DACLK_IN0_N

RF3_CLKO_B_P
C675 100PF
C1022 DNP
R715 49.9
VCCRFC_BUF
C681 DNP
C1016 100PF 16V
C1017 100PF 16V
R716 49.9
RF3_CLKO_B_N
C682 100PF
C1023 DNP
100ohm Trace Differential
DACLK_IN1_P
RF3_CLKO_B_C_P
RF3_CLKO_B_C_N
DACLK_IN1_N

R358 12.0K
LE_2594_C
R581 0
R582 18
C808 1800PF
C809 DNP
C727 0.068UF 10V
C728 390PF 50V
R583 68.1
R359 12.0K
I2C2SPI_SDI
R360 12.0K
I2C2SPI_SCK
MUXOUT_RF3

MUXOUT_RF3
DS44
R545 330

RECAGE4
GND1 GND2 GND3 GND4 GND5 GND6

R&C to be placed as close as possible to device

XILINX
2100 Logic Drive
San Jose, CA 95124

PCB P/N : 1280976
ASSY P/N : 0432076
TEST P/N : TSS0192

Title: HW-Z1-ZCU111
070 DAC RFPLL3

Ver 1.0

Size	Date Modified:	Document Number:	Rev
B	Tuesday, May 29, 2018	0381811	01

Engineer: BF

Sheet 70 of 75

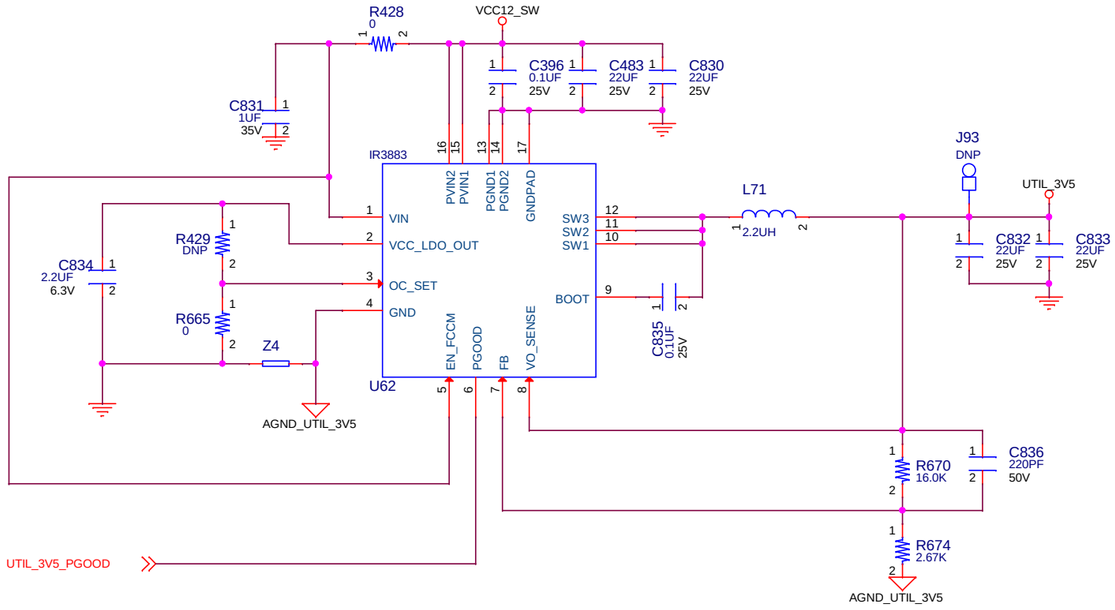

3.5V @ 3A

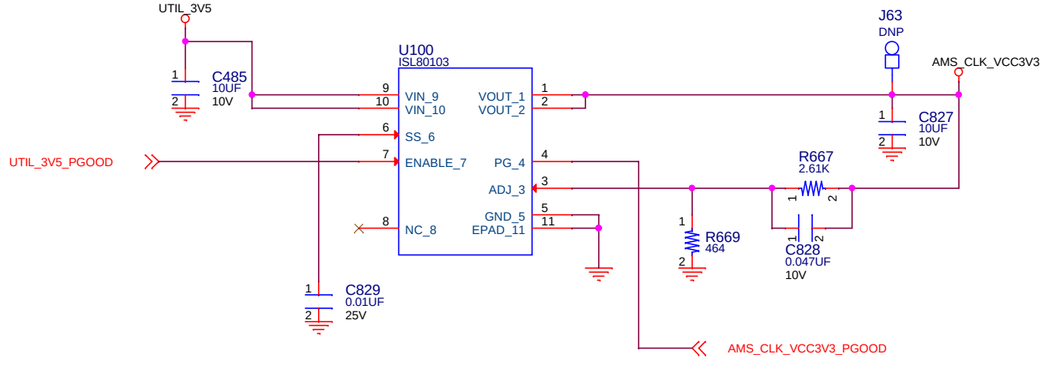

3.3V @ 3A

XILINX
2100 Logic Drive
San Jose, CA 95124

PCB P/N : 1280976
ASSY P/N : 0432076
TEST P/N : TSS0192

Title: HW-Z1-ZCU111
071 AMS CLK Power

Ver 1.0

Size B | Date Modified: Tuesday, May 29, 2018 | Document Number: 0381811 | Rev 01

Engineer: BF | Sheet 71 of 75

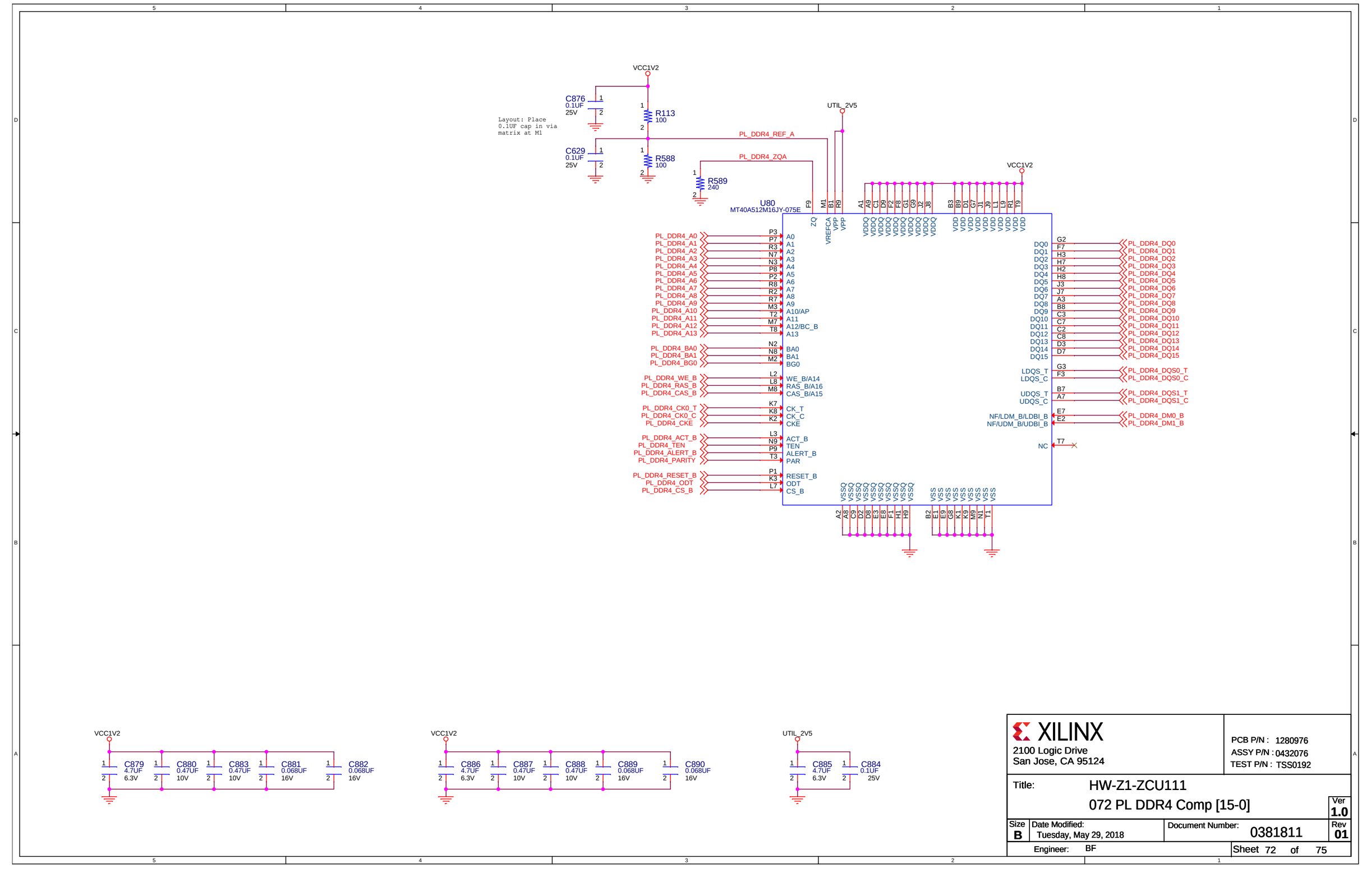

XILINX
2100 Logic Drive
San Jose, CA 95124

PCB P/N : 1280976
ASSY P/N : 0432076
TEST P/N : TSS0192

Title: HW-Z1-ZCU111
072 PL DDR4 Comp [15-0]

Ver 1.0

Size B | Date Modified: Tuesday, May 29, 2018 | Document Number: 0381811 | Rev 01

Engineer: BF | Sheet 72 of 75

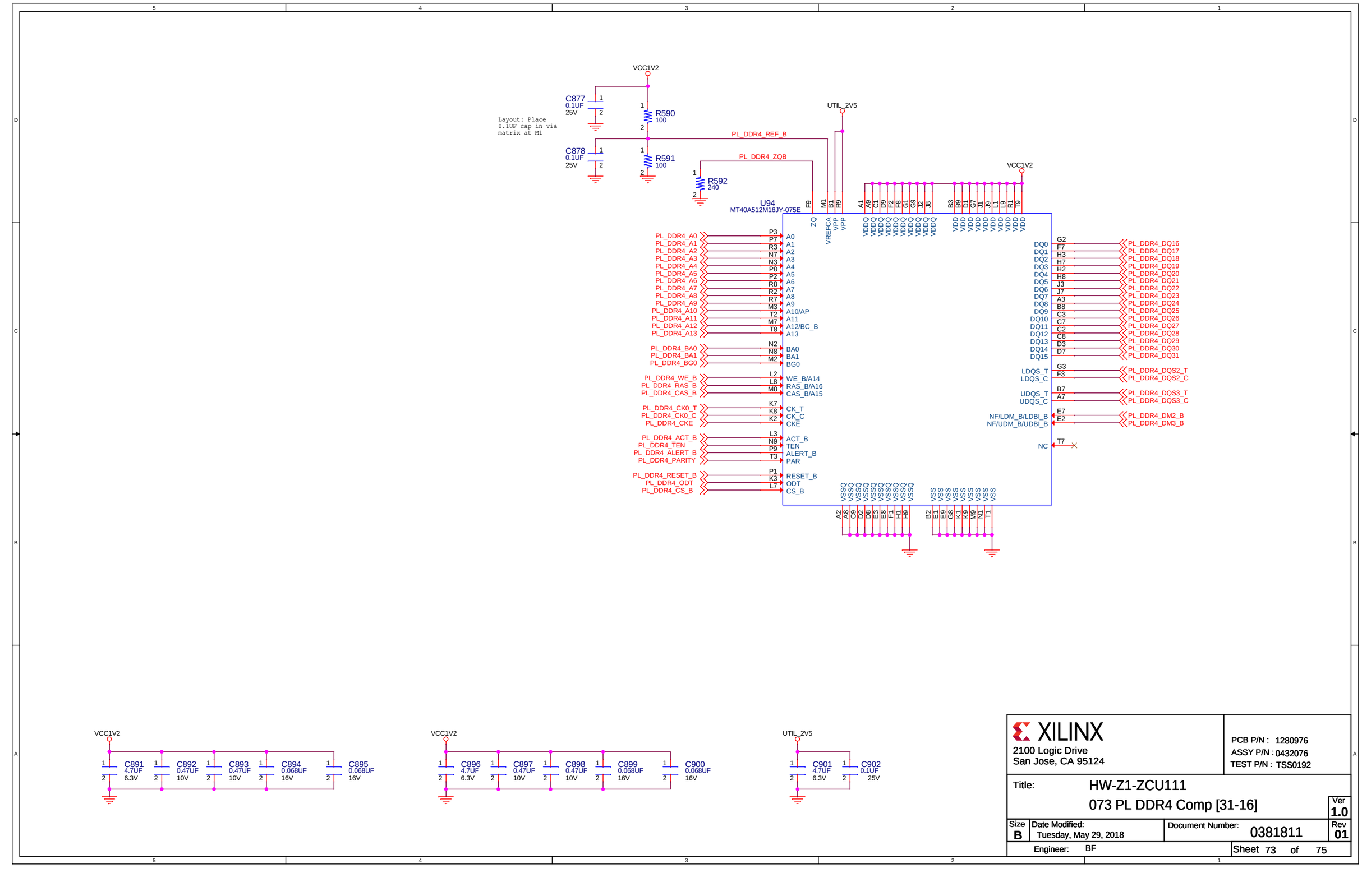

XILINX
2100 Logic Drive
San Jose, CA 95124

PCB P/N : 1280976
ASSY P/N : 0432076
TEST P/N : TSS0192

Title: HW-Z1-ZCU111
073 PL DDR4 Comp [31-16]

Ver 1.0

Size B | Date Modified: Tuesday, May 29, 2018 | Document Number: 0381811 | Rev 01

Engineer: BF | Sheet 73 of 75

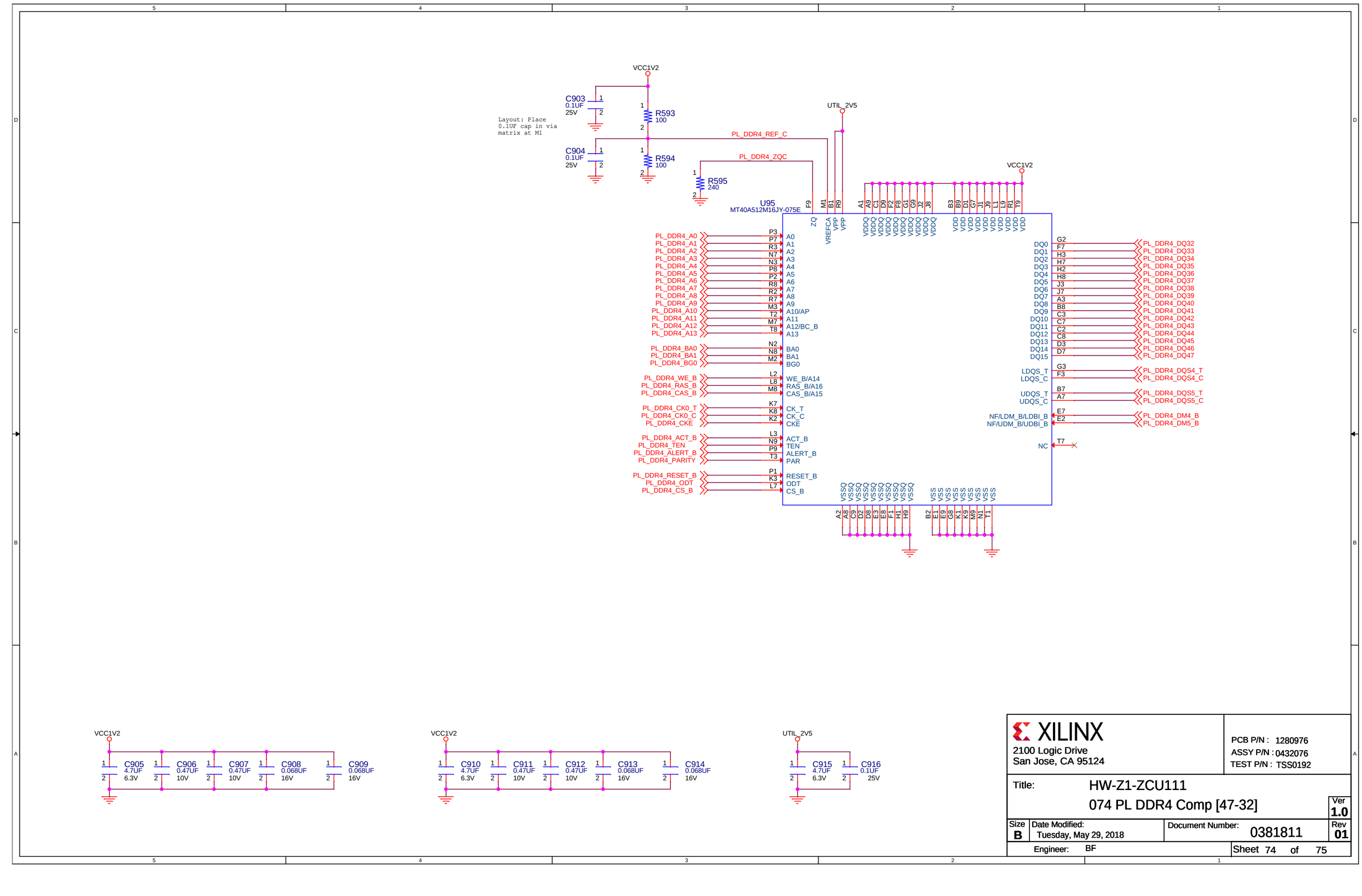

XILINX
2100 Logic Drive
San Jose, CA 95124

PCB P/N : 1280976
ASSY P/N : 0432076
TEST P/N : TSS0192

Title: HW-Z1-ZCU111
074 PL DDR4 Comp [47-32]

Ver 1.0

Size B | Date Modified: Tuesday, May 29, 2018 | Document Number: 0381811 | Rev 01

Engineer: BF | Sheet 74 of 75

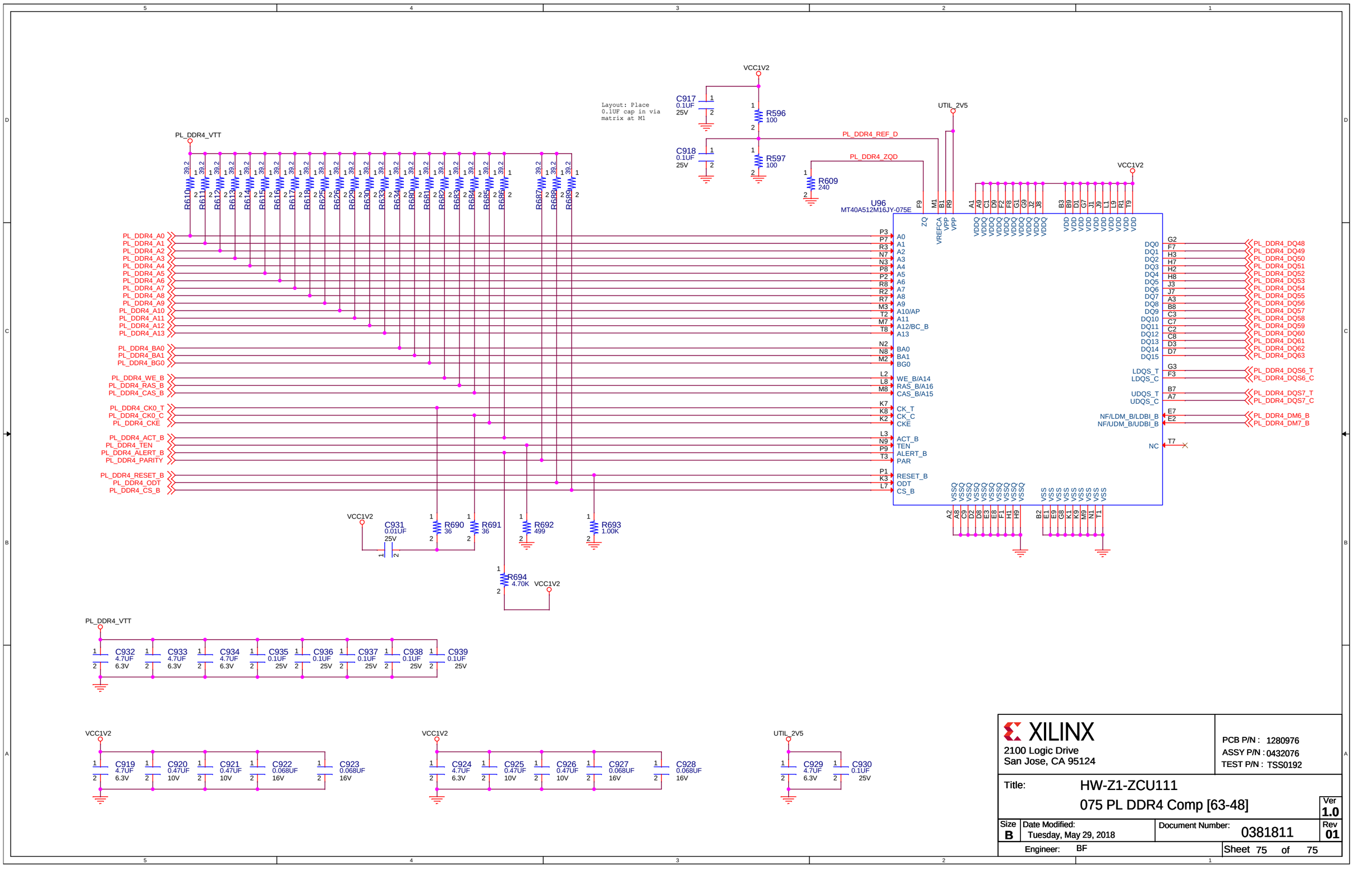
VCC1V2
C917 0.1UF 25V
R596 100
PL_DDR4_REF_D
C918 0.1UF 25V
R597 100
PL_DDR4_ZQD
R609 240
UTIL_2V5
Layout: Place 0.1UF cap in via matrix at M1
PL_DDR4_VTT
R610 R611 R612 R613 R614 R615 R616 R617 R618 R625 R626 R629 R630 R633 R634 R680 R681 R682 R683 R684 R685 R686 R687 R688 R689 39.2
U96
MT40A512M16JY-075E
PL_DDR4_A0
PL_DDR4_A1
PL_DDR4_A2
PL_DDR4_A3
PL_DDR4_A4
PL_DDR4_A5
PL_DDR4_A6
PL_DDR4_A7
PL_DDR4_A8
PL_DDR4_A9
PL_DDR4_A10
PL_DDR4_A11
PL_DDR4_A12
PL_DDR4_A13
PL_DDR4_BA0
PL_DDR4_BA1
PL_DDR4_BG0
PL_DDR4_WE_B
PL_DDR4_RAS_B
PL_DDR4_CAS_B
PL_DDR4_CK0_T
PL_DDR4_CK0_C
PL_DDR4_CKE
PL_DDR4_ACT_B
PL_DDR4_TEN
PL_DDR4_ALERT_B
PL_DDR4_PARITY
PL_DDR4_RESET_B
PL_DDR4_ODT
PL_DDR4_CS_B
P3 P7 R3 N7 N3 P8 P2 R8 R2 R7 M3 T2 M7 T8 A0 A1 A2 A3 A4 A5 A6 A7 A8 A9 A10/AP A11 A12/BC_B A13
N2 N8 M2 BA0 BA1 BG0
L2 L8 M8 WE_B/A14 RAS_B/A16 CAS_B/A15
K7 K8 K2 CK_T CK_C CKE
L3 N9 P9 T3 ACT_B TEN ALERT_B PAR
P1 K3 L7 RESET_B ODT CS_B
ZQ F9
VREFCA M1
VPP B1 R9
VDDQ A1 A9 C1 D9 F2 F8 G1 G9 J2 J8
VDD B3 B9 D1 G7 J1 J9 L1 L9 R1 T9
VSSQ A2 A8 C9 D2 D8 E3 E8 F1 H1 H9
VSS B2 E1 E9 G8 K1 K9 M9 N1 T1
DQ0 G2
DQ1 F7
DQ2 H3
DQ3 H7
DQ4 H2
DQ5 H8
DQ6 J3
DQ7 J7
DQ8 A3
DQ9 B8
DQ10 C3
DQ11 C7
DQ12 C2
DQ13 C8
DQ14 D3
DQ15 D7
LDQS_T G3
LDQS_C F3
UDQS_T B7
UDQS_C A7
NF/LDM_B/LDBI_B E7
NF/UDM_B/UDBI_B E2
NC T7
PL_DDR4_DQ48 PL_DDR4_DQ49 PL_DDR4_DQ50 PL_DDR4_DQ51 PL_DDR4_DQ52 PL_DDR4_DQ53 PL_DDR4_DQ54 PL_DDR4_DQ55 PL_DDR4_DQ56 PL_DDR4_DQ57 PL_DDR4_DQ58 PL_DDR4_DQ59 PL_DDR4_DQ60 PL_DDR4_DQ61 PL_DDR4_DQ62 PL_DDR4_DQ63
PL_DDR4_DQS6_T PL_DDR4_DQS6_C
PL_DDR4_DQS7_T PL_DDR4_DQS7_C
PL_DDR4_DM6_B PL_DDR4_DM7_B
VCC1V2
C931 0.01UF 25V
R690 36
R691 36
R692 499
R693 1.00K
R694 4.70K
PL_DDR4_VTT
C932 4.7UF 6.3V
C933 4.7UF 6.3V
C934 4.7UF 6.3V
C935 0.1UF 25V
C936 0.1UF 25V
C937 0.1UF 25V
C938 0.1UF 25V
C939 0.1UF 25V
VCC1V2
C919 4.7UF 6.3V
C920 0.47UF 10V
C921 0.47UF 10V
C922 0.068UF 16V
C923 0.068UF 16V
VCC1V2
C924 4.7UF 6.3V
C925 0.47UF 10V
C926 0.47UF 10V
C927 0.068UF 16V
C928 0.068UF 16V
UTIL_2V5
C929 4.7UF 6.3V
C930 0.1UF 25V
XILINX
2100 Logic Drive
San Jose, CA 95124
PCB P/N : 1280976
ASSY P/N : 0432076
TEST P/N : TSS0192
Title: HW-Z1-ZCU111
075 PL DDR4 Comp [63-48]
Ver 1.0
Size B
Date Modified: Tuesday, May 29, 2018
Document Number: 0381811
Rev 01
Engineer: BF
Sheet 75 of 75